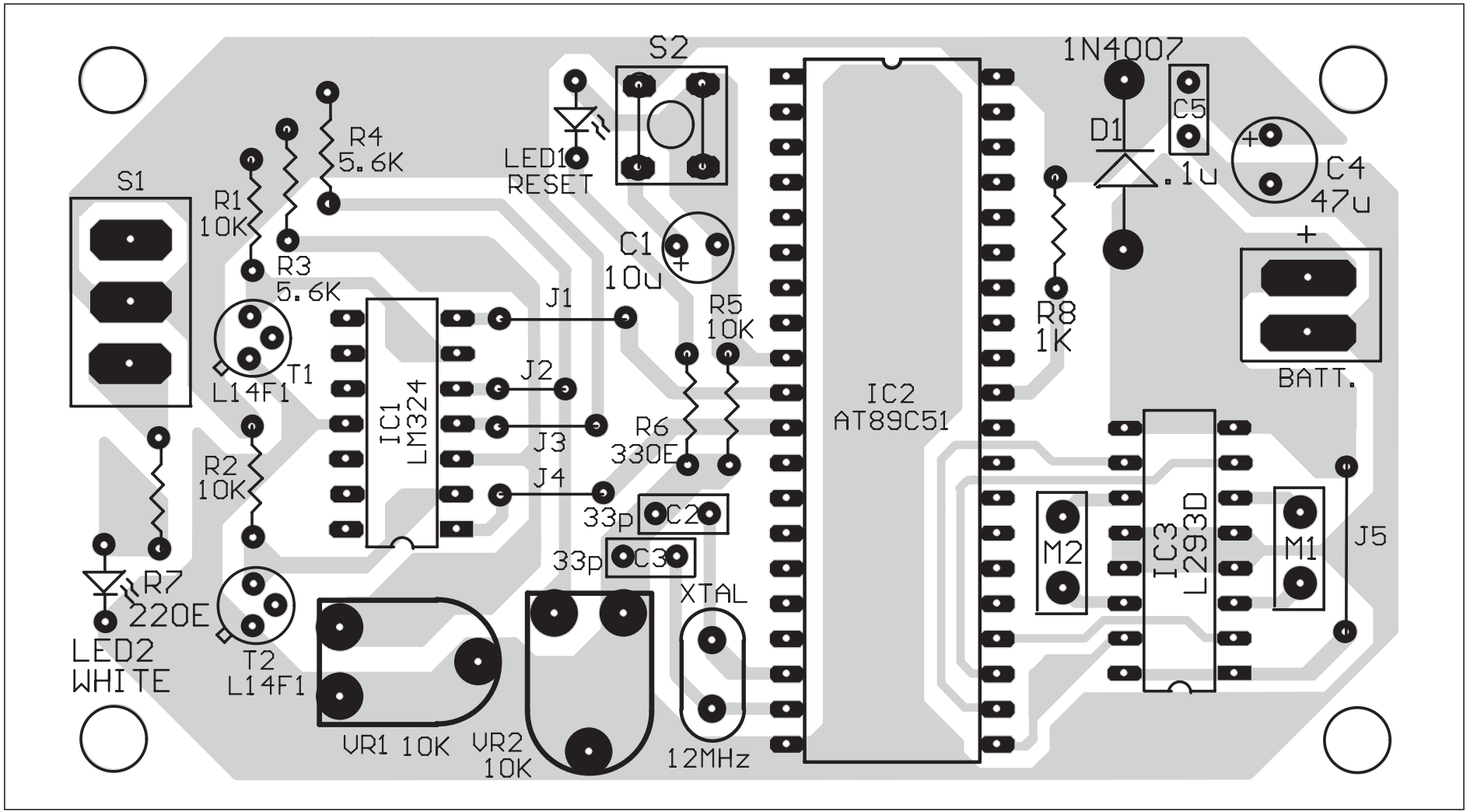

Fig. 4: Component layout for the PCB