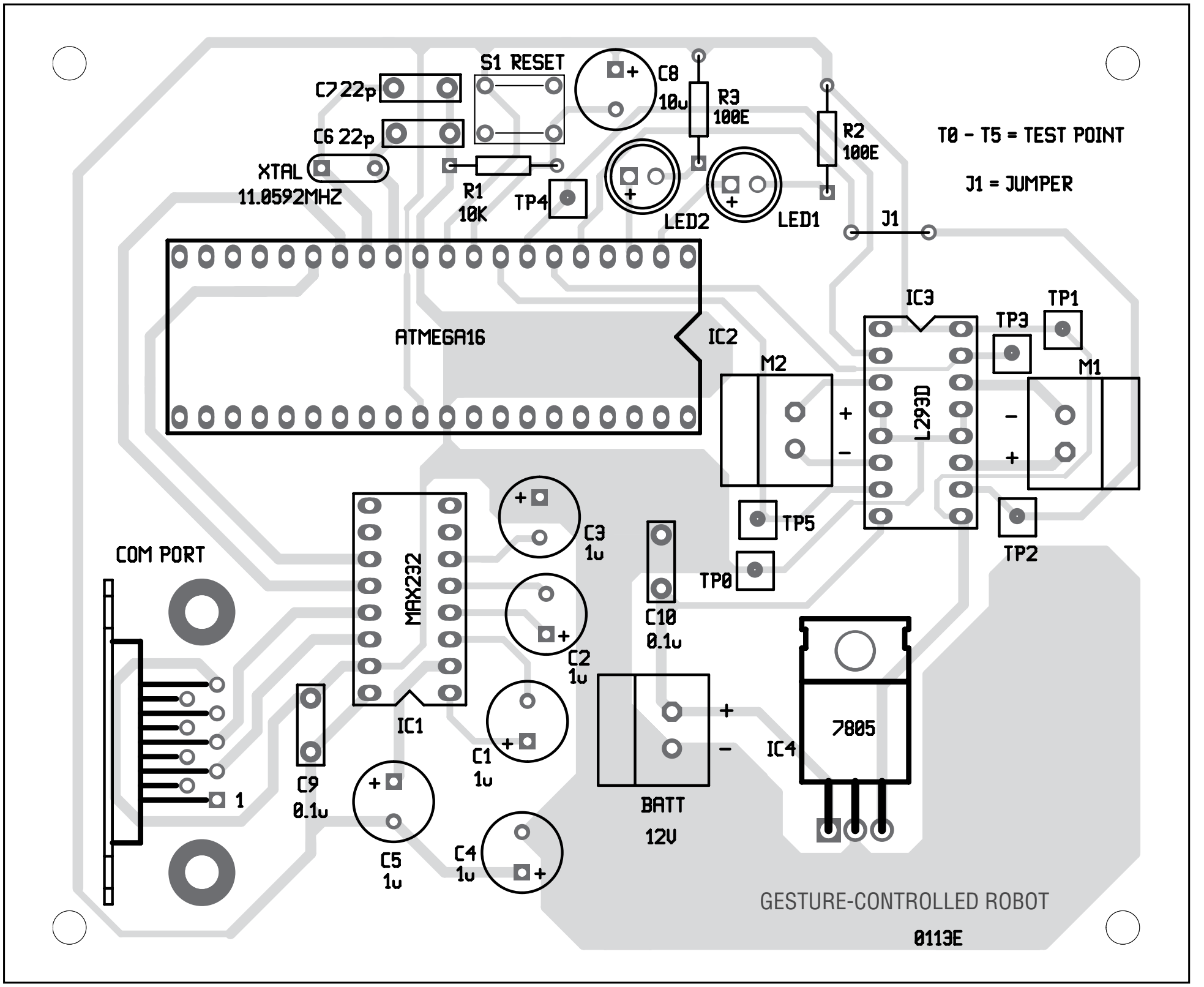

Fig. 8: Component layout for the PCB