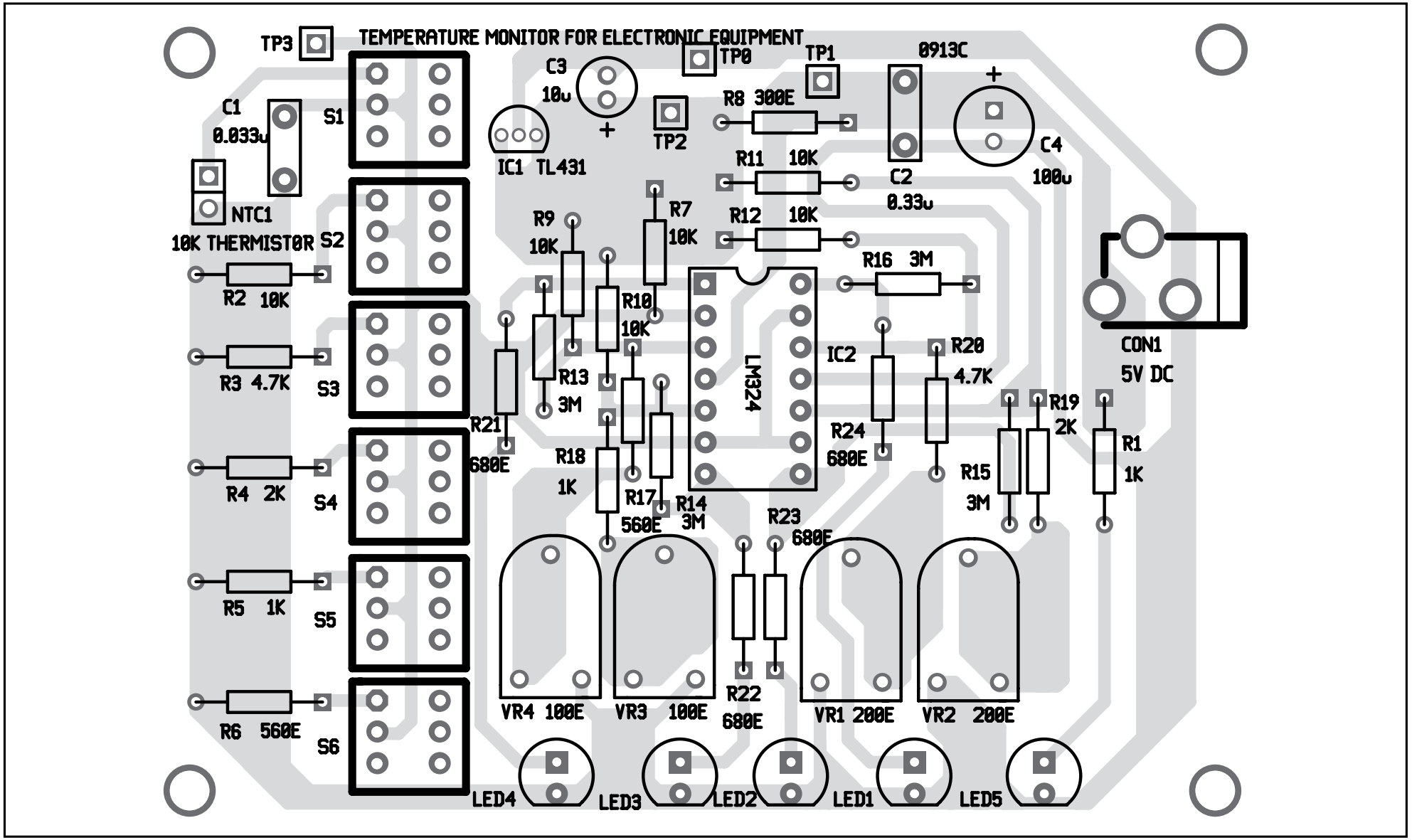


*Fig. 3: Component layout for the PCB*