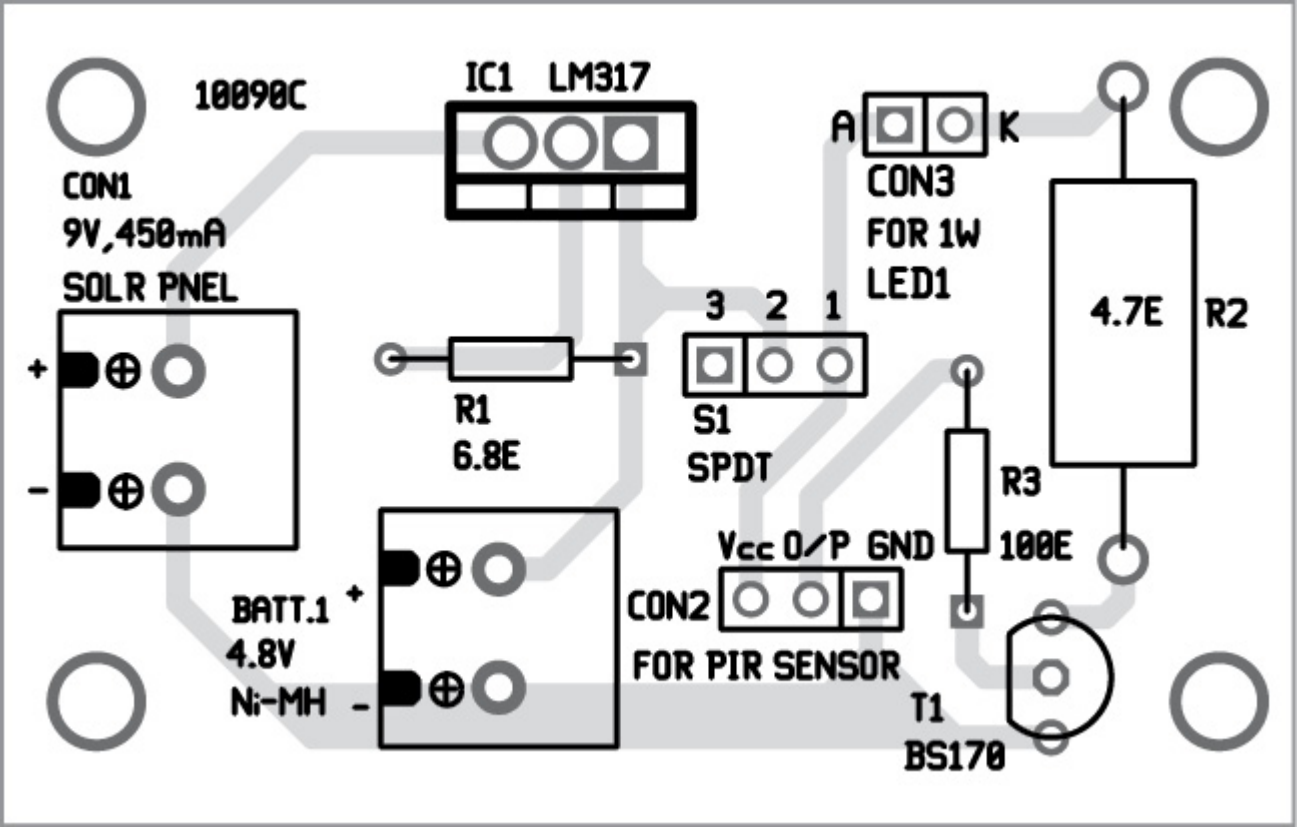
10090C
IC1 LM317
A
K
CON3
FOR 1W
LED1
CON1
9V,450mA
SOLR PNEL
+
-
3 2 1
S1
SPDT
R1
6.8E
4.7E
R2
R3
100E
Vcc O/P GND
CON2
FOR PIR SENSOR
BATT.1
4.8V
Ni-MH
+
-
T1
BS170