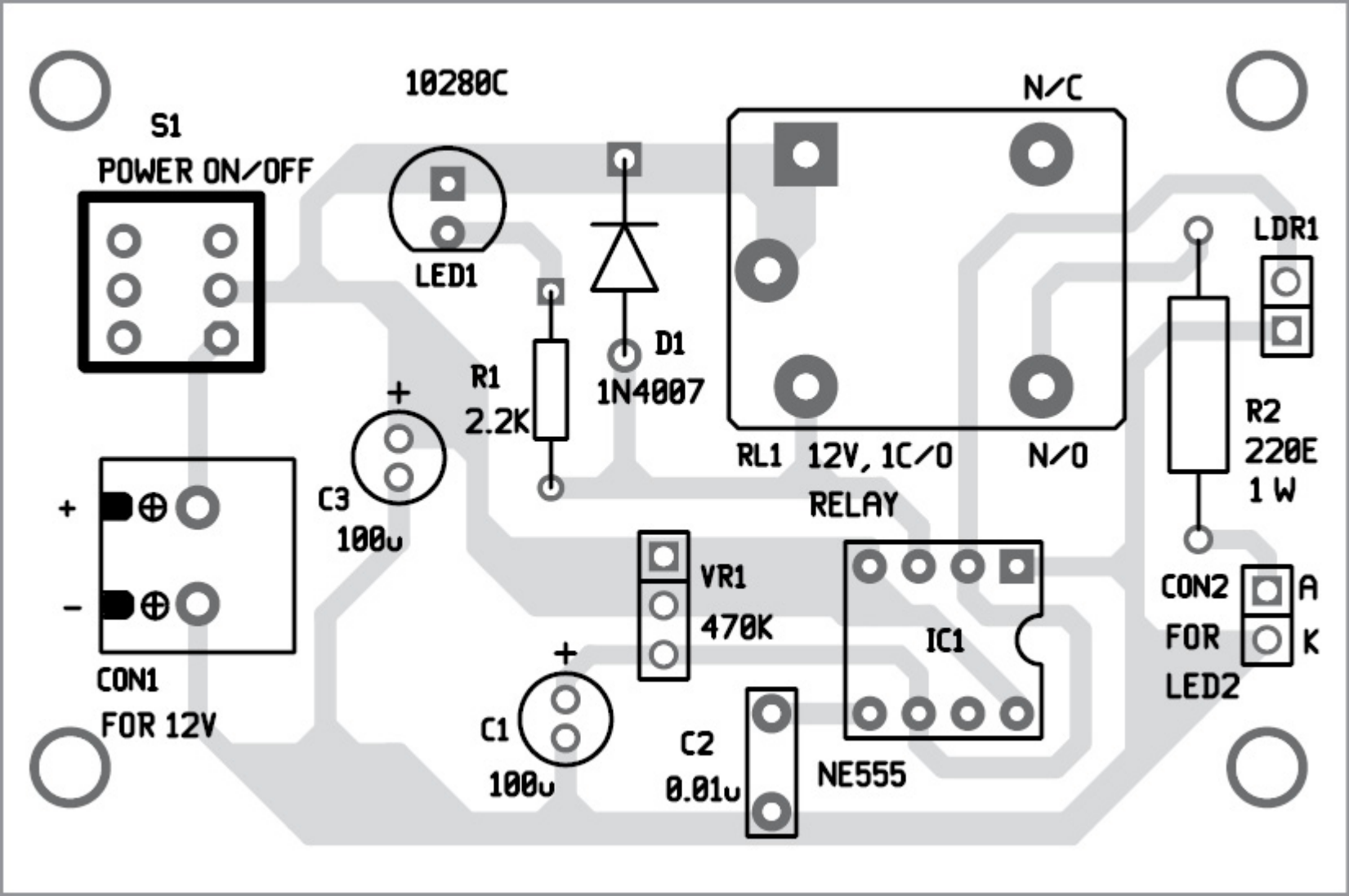
10280C
S1
POWER ON/OFF
LED1
D1
1N4007
R1
2.2K
N/C
RL1 12V, 1C/O
RELAY
N/O
LDR1
R2
220E
1 W
C3
100u
+
-
CON1
FOR 12V
VR1
470K
IC1
CON2
FOR
LED2
A
K
C1
100u
C2
0.01u
NE555