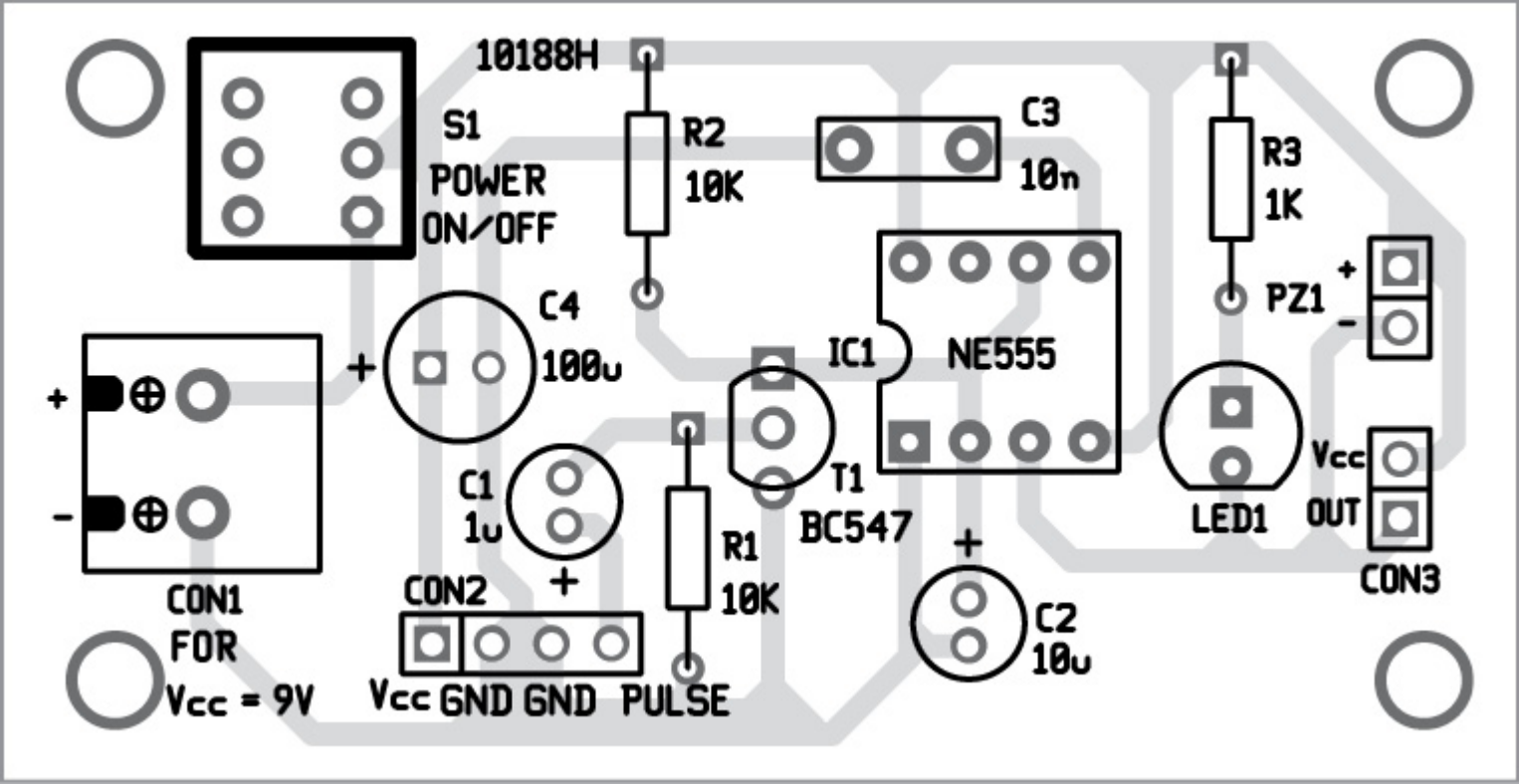
10188H
S1
POWER
ON/OFF
R2
10K
C3
10n
R3
1K
PZ1
+
-
C4
100u
IC1
NE555
+
-
CON1
FOR
Vcc = 9V
C1
1u
T1
BC547
R1
10K
CON2
Vcc GND GND PULSE
C2
10u
LED1
Vcc
OUT
CON3