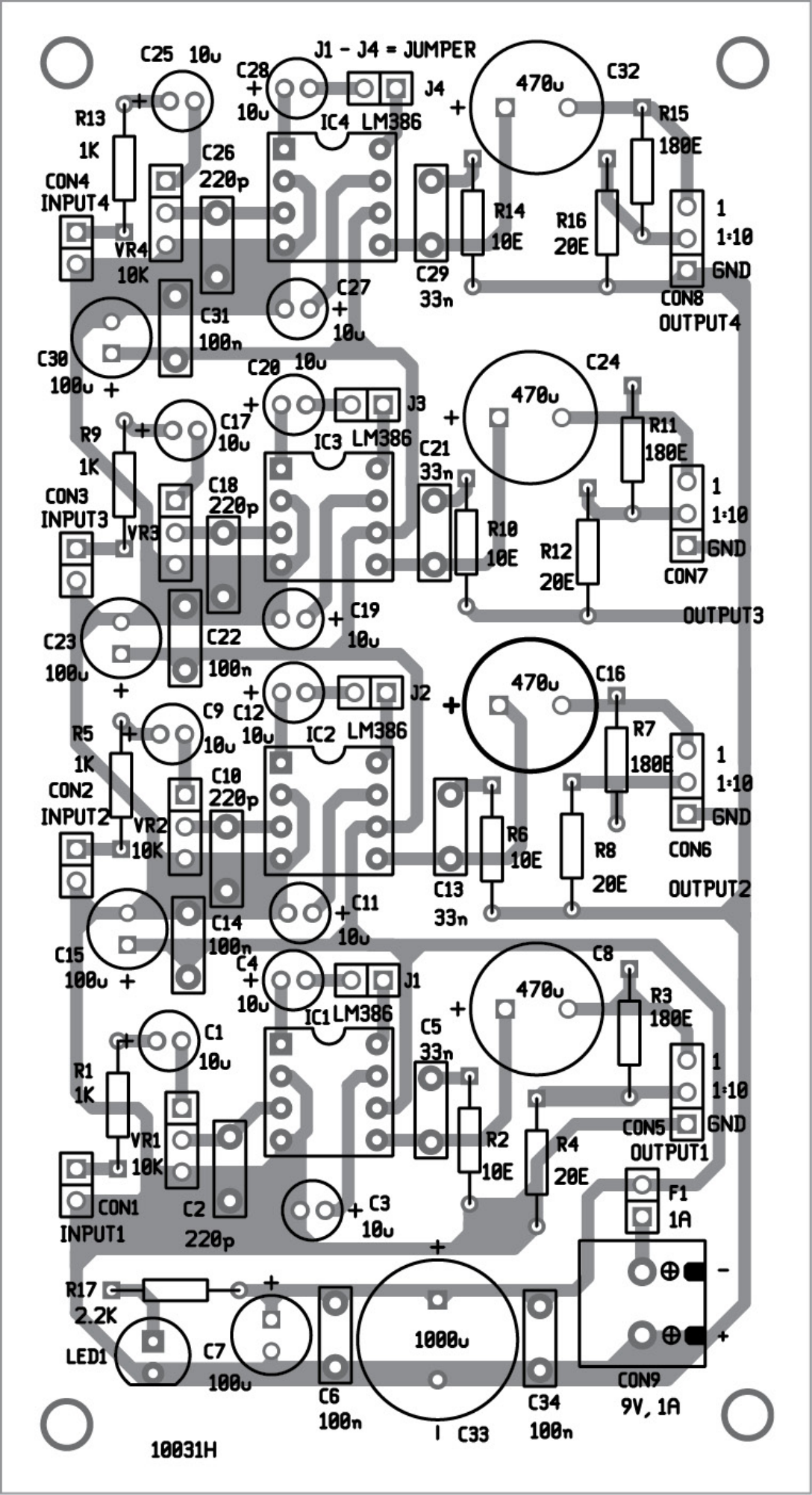
J1 - J4 = JUMPER
C25 10u
C28 10u
J4
IC4 LM386
470u
C32
R15 180E
R13 1K
C26 220p
CON4 INPUT4
VR4 10K
R14 10E
R16 20E
C29 33n
1
1:10
GND
CON8 OUTPUT4
C27 10u
C31 100n
C30 100u
C20 10u
J3
470u
C24
R11 180E
C17 10u
R9 1K
IC3 LM386
C21 33n
CON3 INPUT3
C18 220p
VR3
R10 10E
R12 20E
CON7
OUTPUT3
C19 10u
C23 100u
C22 100n
470u
C16
J2
C9 10u
C12 10u
R5 1K
IC2 LM386
R7 180E
CON2 INPUT2
C10 220p
VR2 10K
R6 10E
R8 20E
CON6
OUTPUT2
C13 33n
C11 10u
C14 100n
C15 100u
C4 10u
J1
470u
C8
R3 180E
IC1 LM386
C1 10u
C5 33n
R1 1K
VR1 10K
R2 10E
R4 20E
CON5 OUTPUT1
CON1 INPUT1
C2 220p
C3 10u
F1 1A
R17 2.2K
LED1
C7 100u
C6 100n
1000u
C33
C34 100n
CON9 9V, 1A
10031H