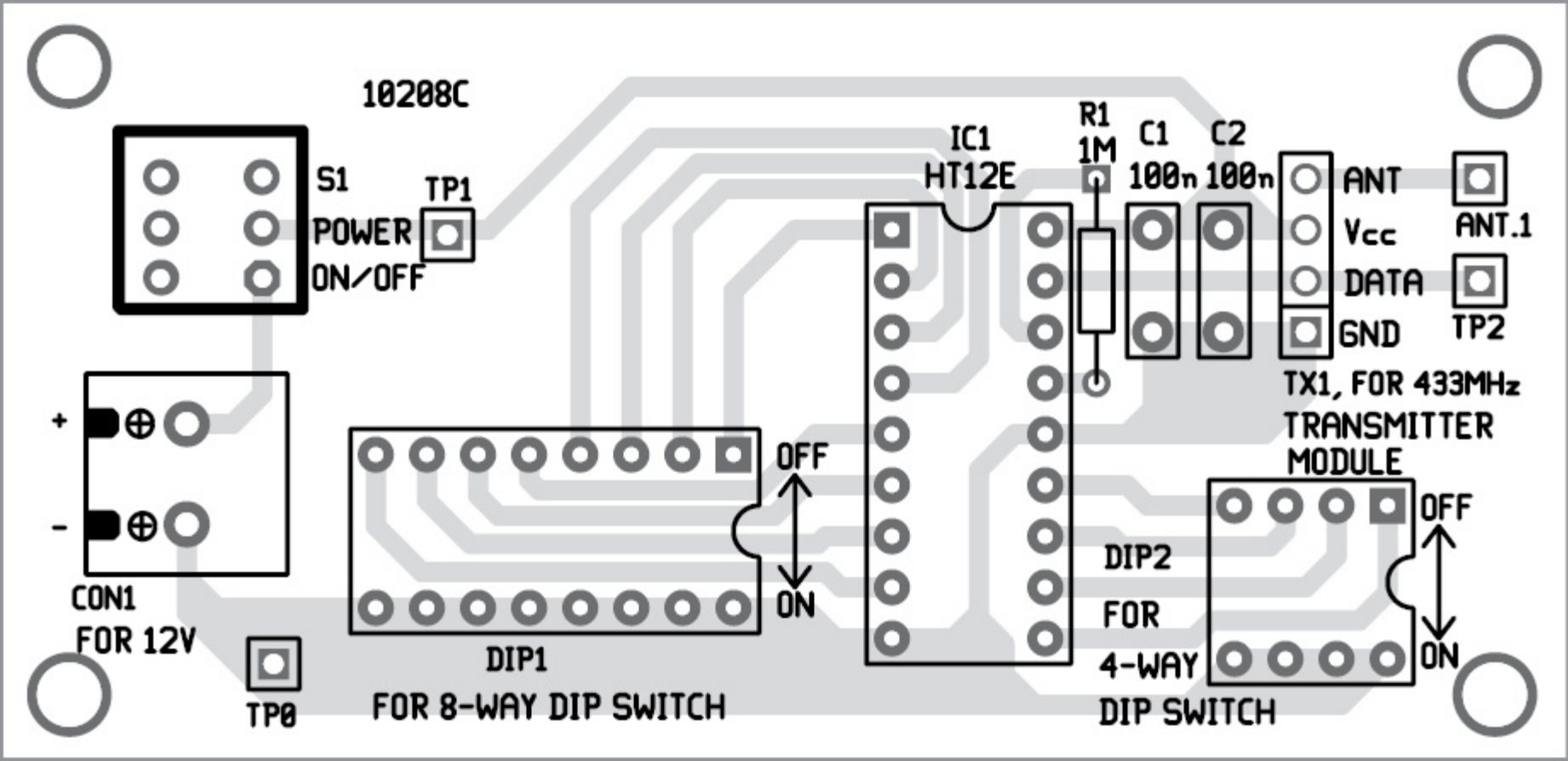
10208C
S1
POWER
ON/OFF
TP1
+
-
CON1
FOR 12V
TP0
OFF
ON
DIP1
FOR 8-WAY DIP SWITCH
IC1
HT12E
R1
1M
C1
100n
C2
100n
ANT
Vcc
DATA
GND
TX1, FOR 433MHz
TRANSMITTER
MODULE
ANT.1
TP2
OFF
ON
DIP2
FOR
4-WAY
DIP SWITCH