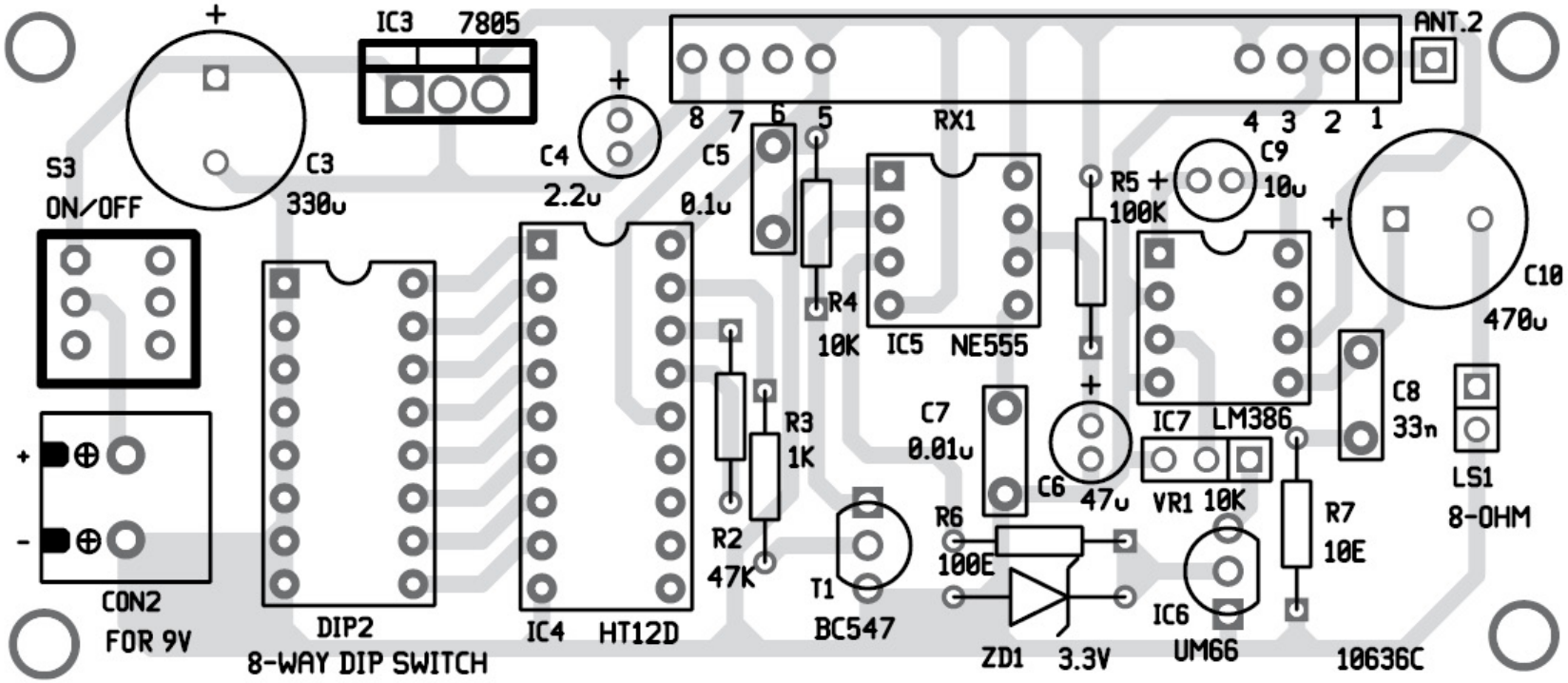
IC3 7805
ANT.2
8 7 6 5
RX1
4 3 2 1
S3
ON/OFF
C3
330u
C4
2.2u
C5
0.1u
R4
10K
IC5 NE555
R5
100K
C9
10u
C10
470u
R3
1K
R2
47K
C7
0.01u
C6
47u
IC7 LM386
C8
33n
LS1
8-OHM
VR1 10K
R7
10E
R6
100E
T1
BC547
ZD1 3.3V
IC6
UM66
10636C
CON2
FOR 9V
DIP2
8-WAY DIP SWITCH
IC4 HT12D