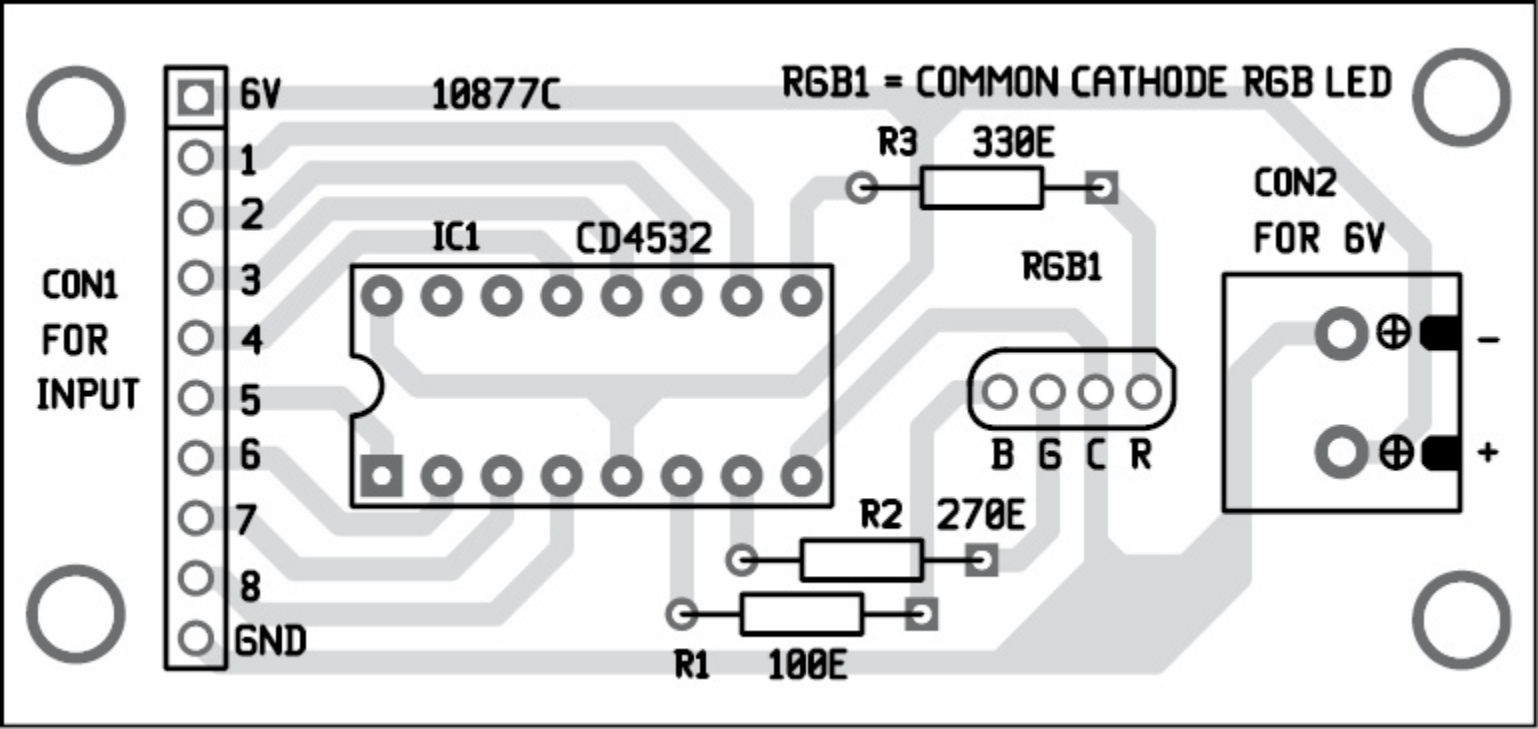
6V
1
2
3
4
5
6
7
8
GND
CON1
FOR
INPUT
10877C
RGB1 = COMMON CATHODE RGB LED
R3
330E
IC1
CD4532
RGB1
B G C R
CON2
FOR 6V
-
+
R2
270E
R1
100E