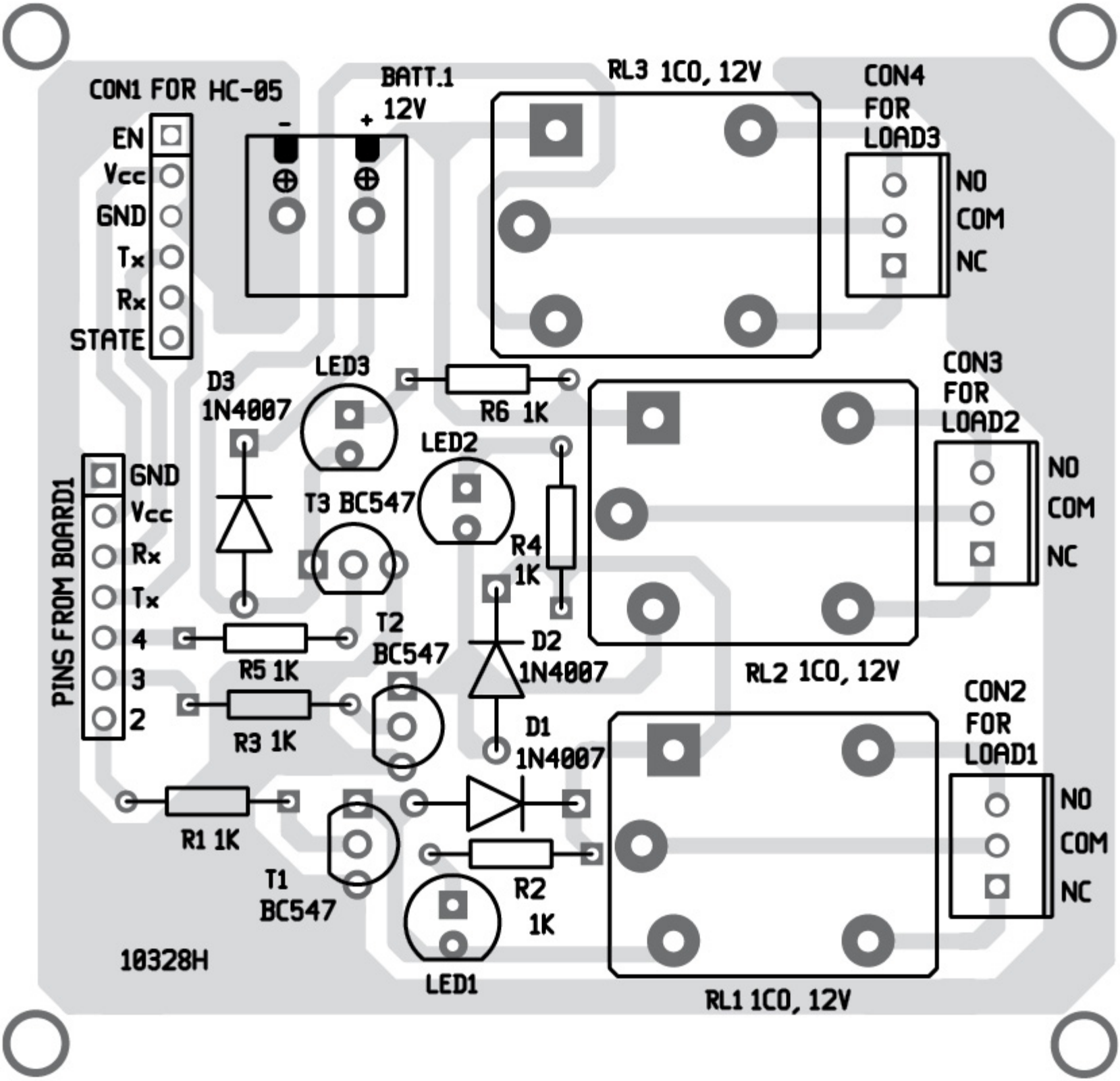
CON1 FOR HC-05
EN
Vcc
GND
Tx
Rx
STATE
BATT.1
12V
-
+
RL3 1CO, 12V
CON4
FOR
LOAD3
NO
COM
NC
D3
1N4007
LED3
R6 1K
LED2
T3 BC547
R4
1K
CON3
FOR
LOAD2
NO
COM
NC
PINS FROM BOARD1
GND
Vcc
Rx
Tx
4
3
2
R5 1K
T2
BC547
D2
1N4007
RL2 1CO, 12V
R3 1K
D1
1N4007
CON2
FOR
LOAD1
NO
COM
NC
R1 1K
T1
BC547
R2
1K
10328H
LED1
RL1 1CO, 12V