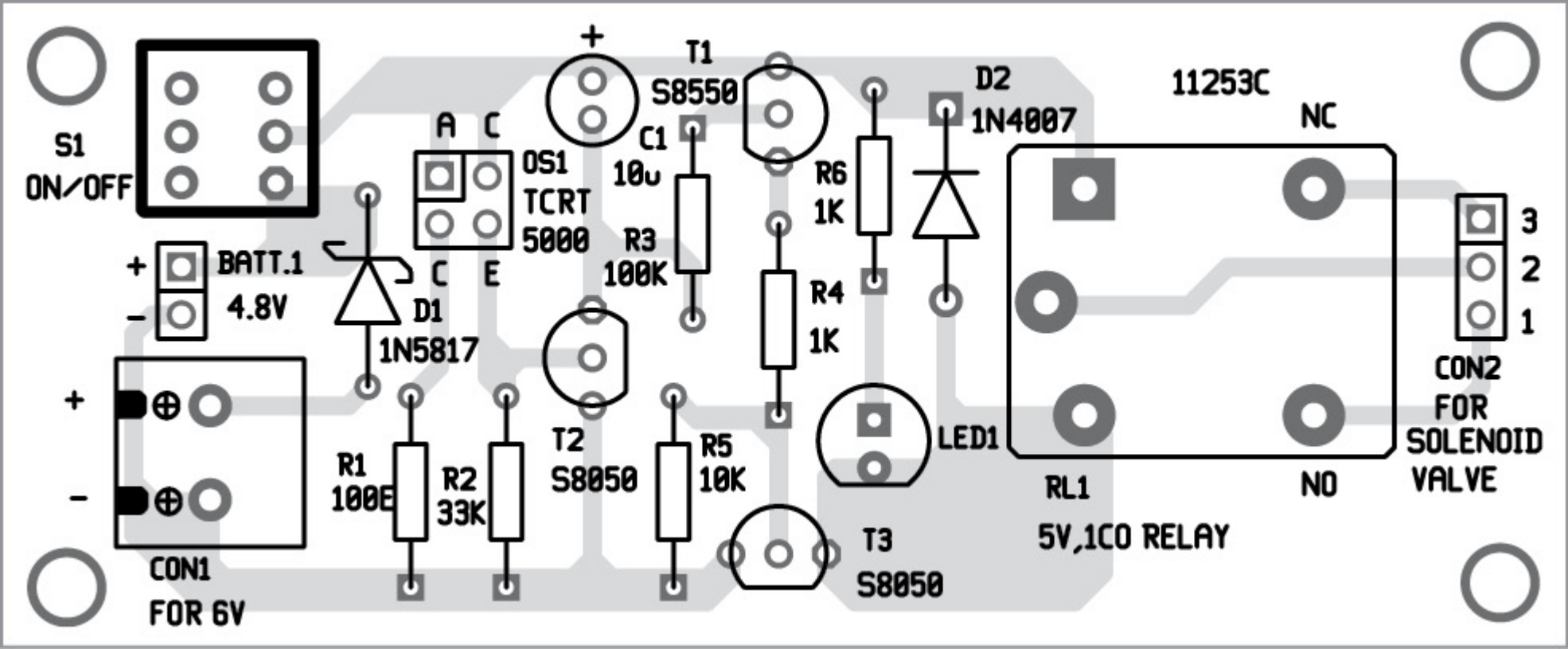
S1
ON/OFF
BATT.1
4.8V
+
-
CON1
FOR 6V
D1
1N5817
A C
C E
OS1
TCRT
5000
R1
100E
R2
33K
T2
S8050
C1
10u
T1
S8550
R3
100K
R5
10K
R4
1K
R6
1K
T3
S8050
LED1
D2
1N4007
11253C
NC
NO
RL1
5V,1CO RELAY
3
2
1
CON2
FOR
SOLENOID
VALVE