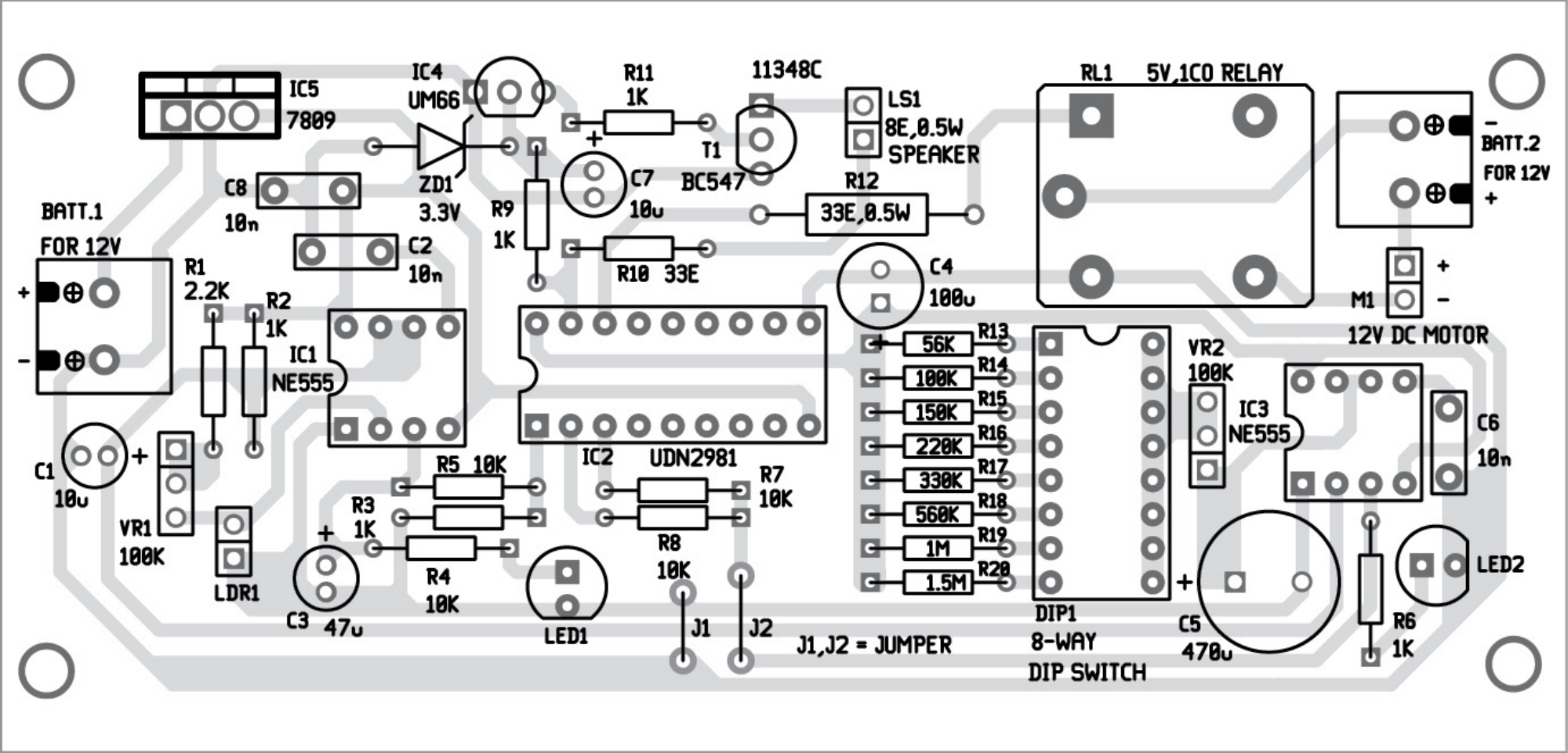
IC5
7809
IC4
UM66
ZD1
3.3V
R11
1K
11348C
T1
BC547
LS1
8E,0.5W
SPEAKER
RL1
5V,1CO RELAY
BATT.2
FOR 12V
C8
10n
C7
10u
R12
33E,0.5W
BATT.1
FOR 12V
R9
1K
C2
10n
R10 33E
C4
100u
M1
12V DC MOTOR
R1
2.2K
R2
1K
IC1
NE555
56K
R13
100K
R14
150K
R15
220K
R16
330K
R17
560K
R18
1M
R19
1.5M
R20
VR2
100K
IC3
NE555
C6
10n
C1
10u
VR1
100K
R5 10K
IC2
UDN2981
R7
10K
R3
1K
R8
10K
LDR1
R4
10K
C3
47u
LED1
J1
J2
J1,J2 = JUMPER
DIP1
8-WAY
DIP SWITCH
C5
470u
R6
1K
LED2