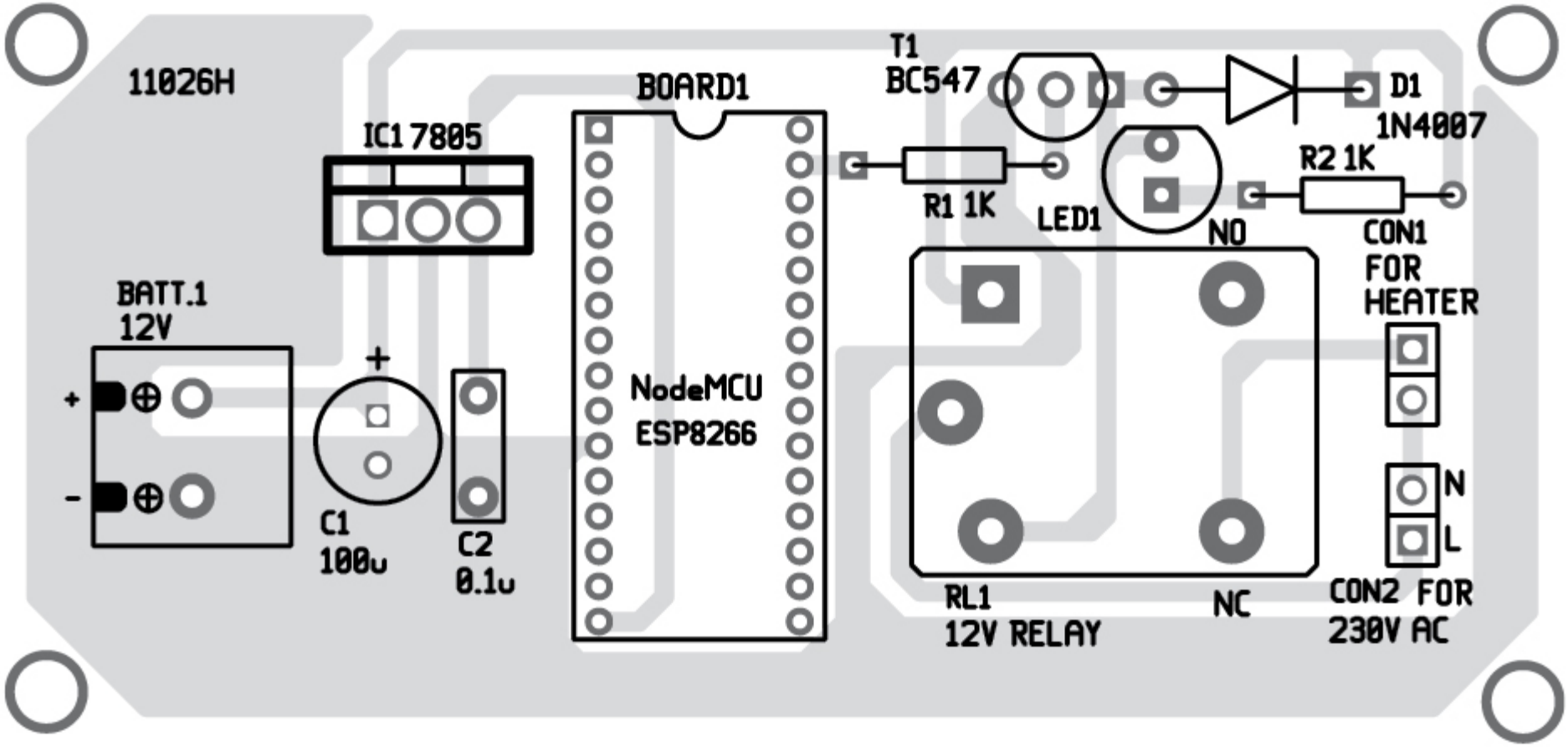
11026H
IC1 7805
BOARD1
T1
BC547
D1
1N4007
R1 1K
LED1
R2 1K
NO
CON1
FOR
HEATER
BATT.1
12V
+
-
C1
100u
C2
0.1u
NodeMCU
ESP8266
RL1
12V RELAY
NC
N
L
CON2 FOR
230V AC