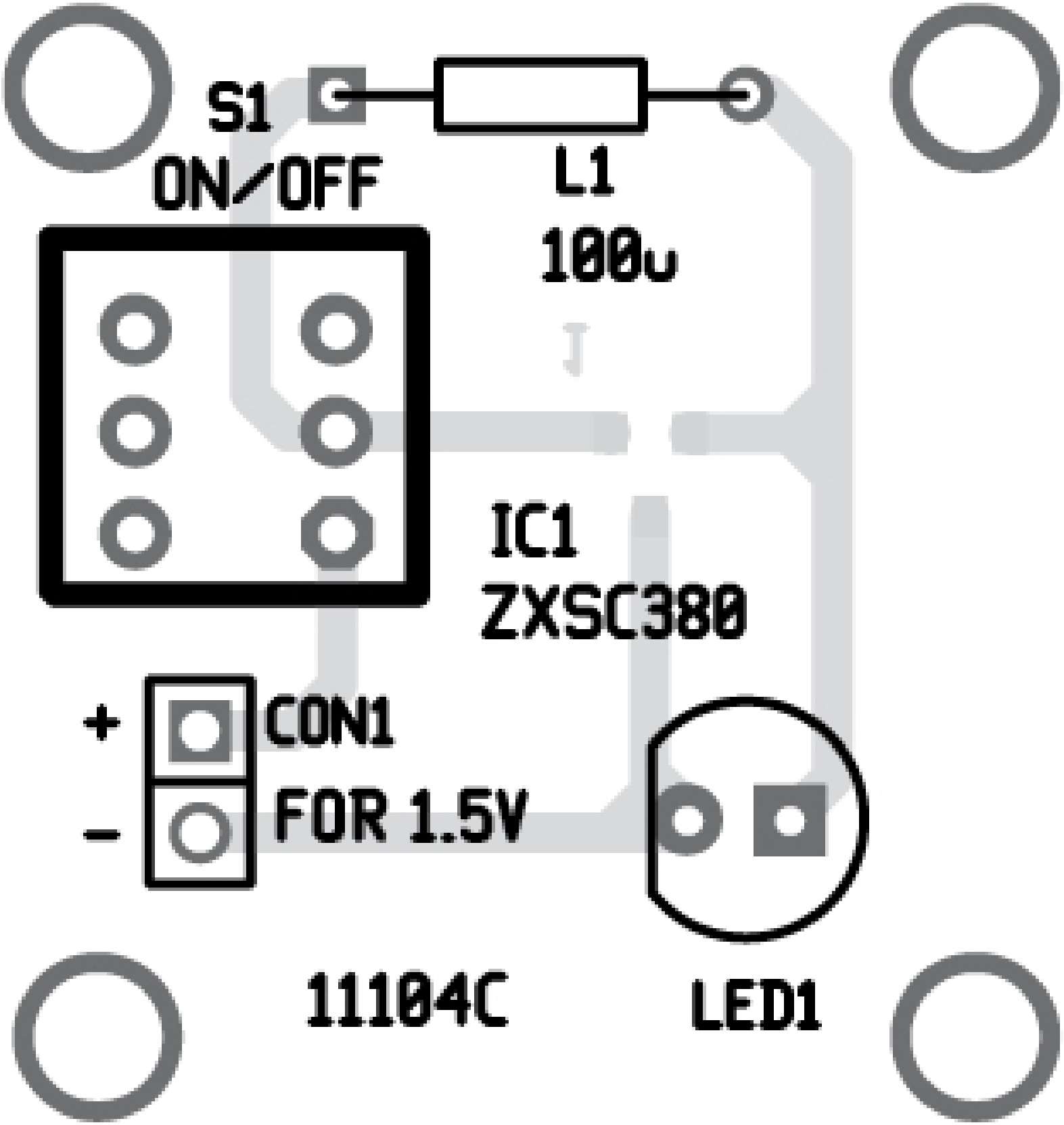
S1
ON/OFF
L1
100u
IC1
ZXSC380
+
CON1
–
FOR 1.5V
11104C
LED1