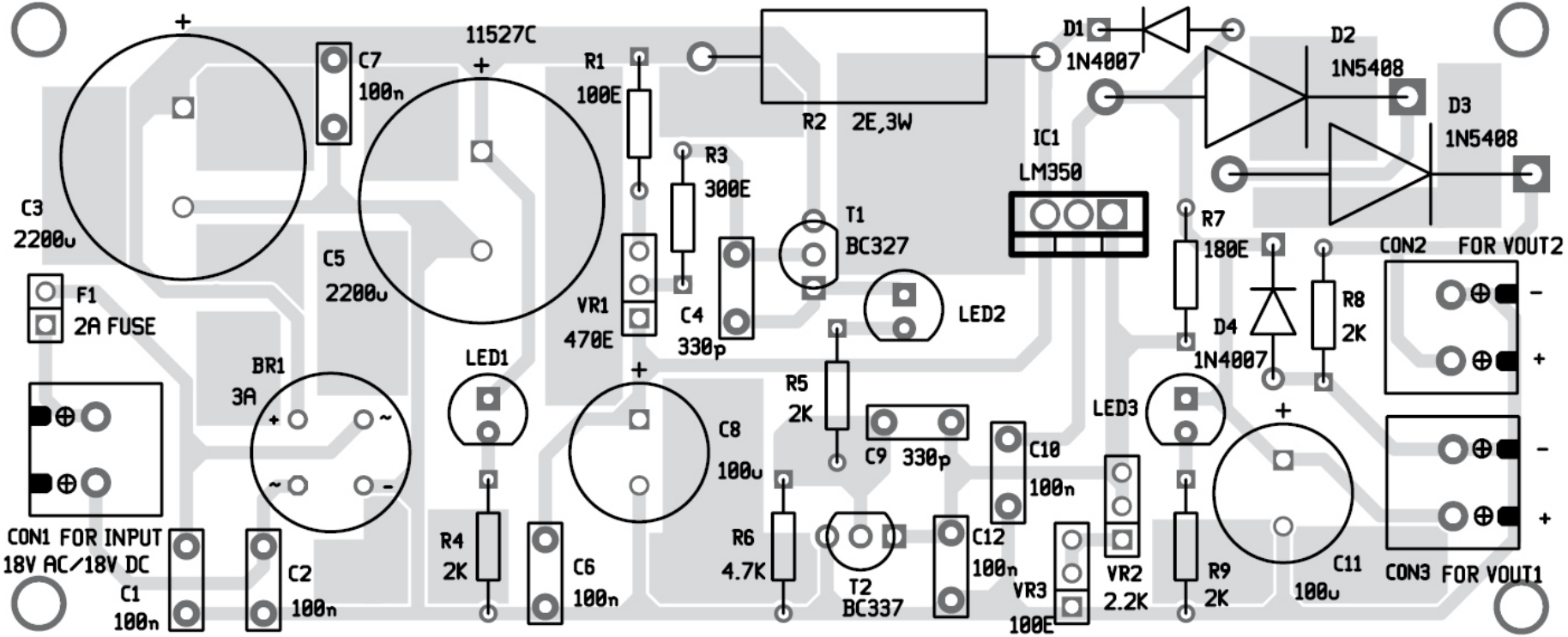
C3
2200u
C7
100n
11527C
C5
2200u
R1
100E
R2 2E,3W
D1
1N4007
D2
1N5408
D3
1N5408
IC1
LM350
R3
300E
T1
BC327
C4
330p
VR1
470E
F1
2A FUSE
BR1
3A
LED1
C8
100u
R5
2K
C9 330p
LED2
R7
180E
D4
1N4007
R8
2K
CON2 FOR VOUT2
LED3
C10
100n
C11
100u
CON1 FOR INPUT
18V AC/18V DC
C1
100n
C2
100n
R4
2K
C6
100n
R6
4.7K
T2
BC337
C12
100n
VR3
100E
VR2
2.2K
R9
2K
CON3 FOR VOUT1