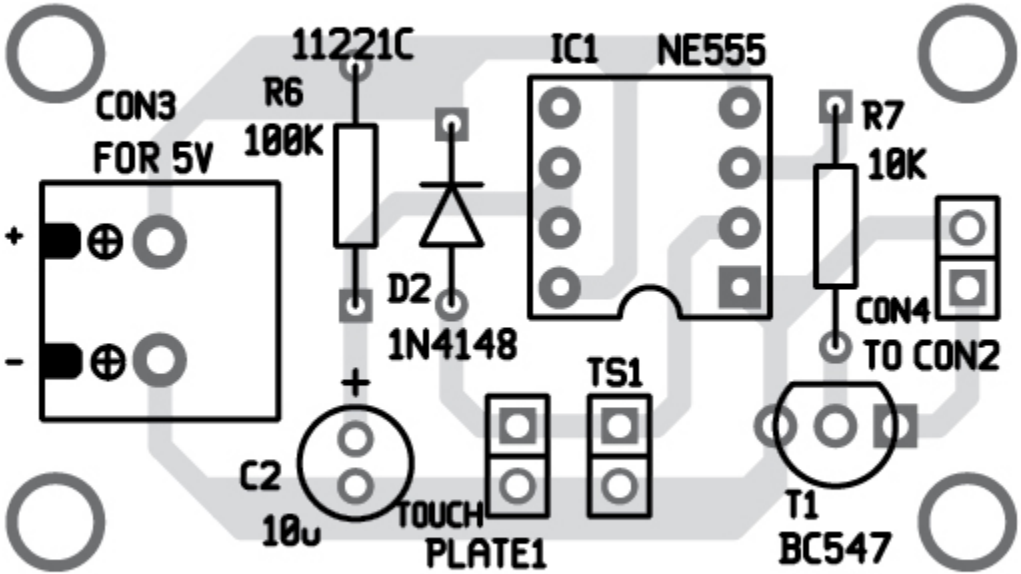
11221C
IC1
NE555
CON3
FOR 5V
R6
100K
R7
10K
+
-
D2
1N4148
CON4
TO CON2
TS1
C2
10u
TOUCH
PLATE1
T1
BC547