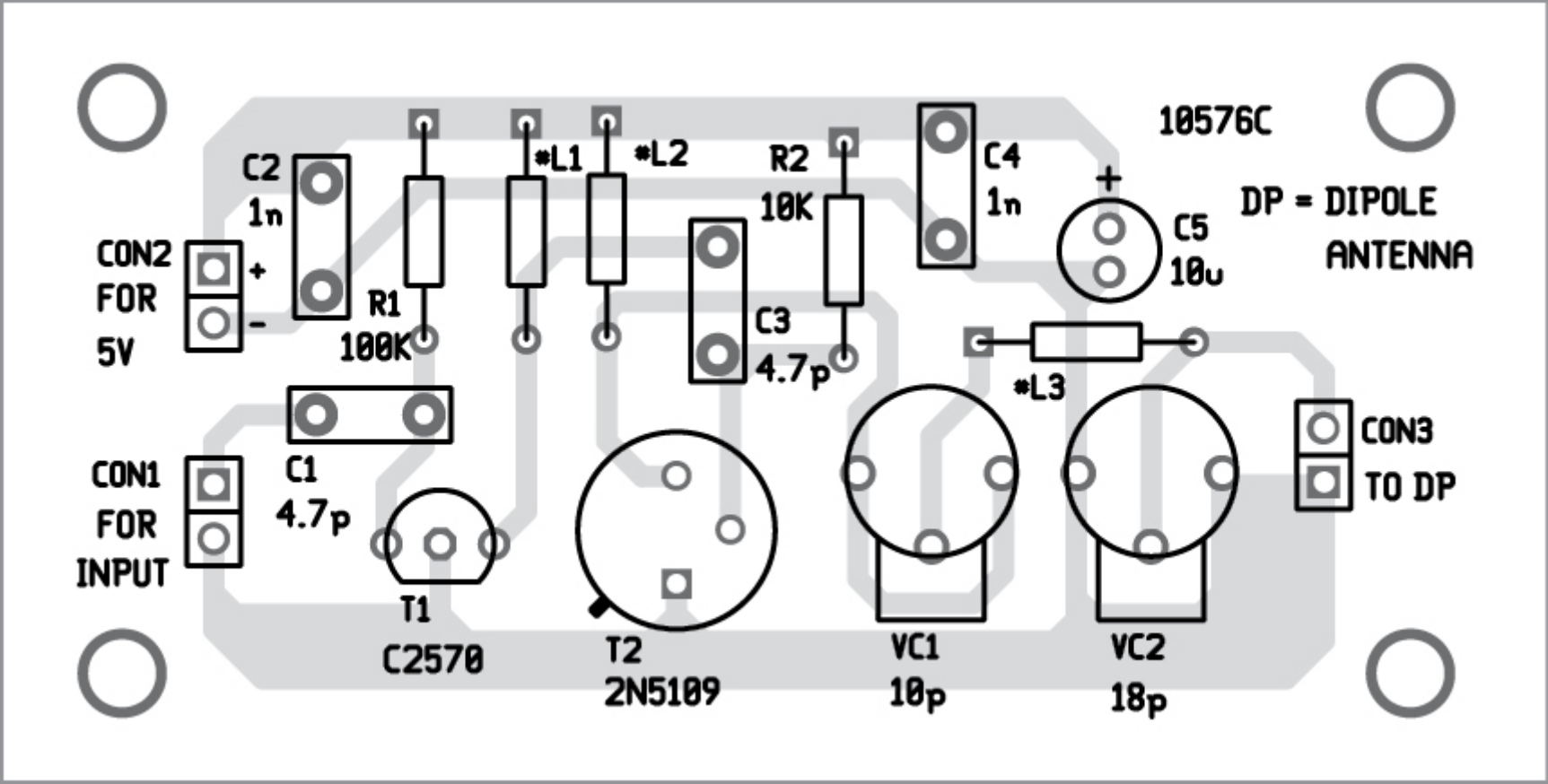
10576C
DP = DIPOLE
ANTENNA
C2
1n
CON2
FOR
5V
+
-
R1
100K
*L1
*L2
R2
10K
C3
4.7p
C4
1n
C5
10u
*L3
CON3
TO DP
CON1
FOR
INPUT
C1
4.7p
T1
C2570
T2
2N5109
VC1
10p
VC2
18p