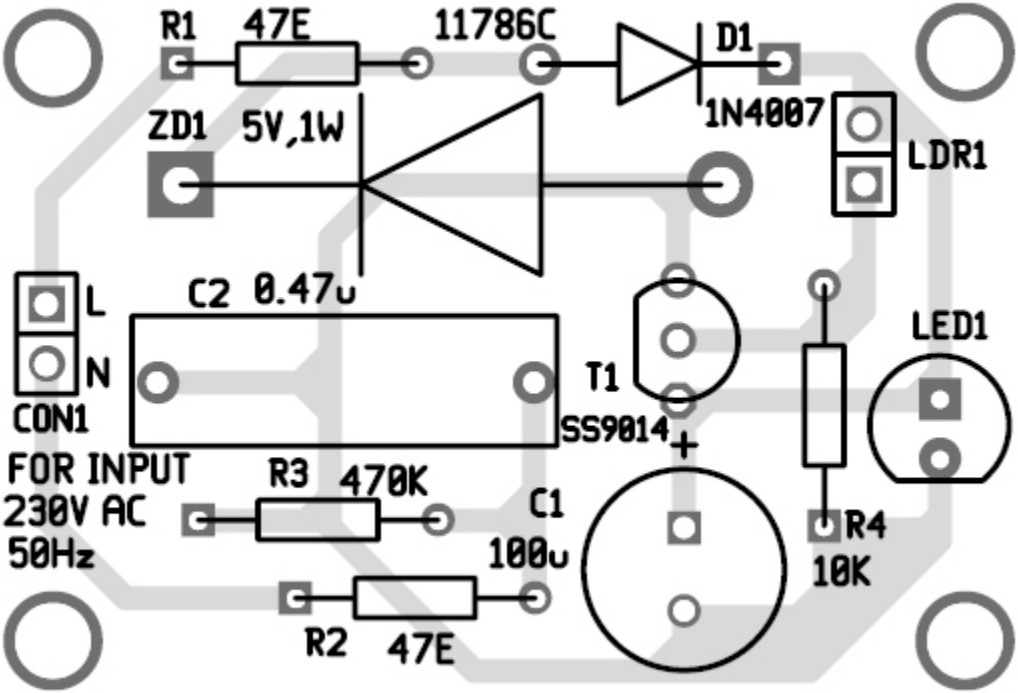
R1
47E
11786C
D1
1N4007
ZD1
5V,1W
LDR1
L
N
CON1
C2
0.47u
T1
SS9014
LED1
FOR INPUT
230V AC
50Hz
R3
470K
C1
100u
R4
10K
R2
47E