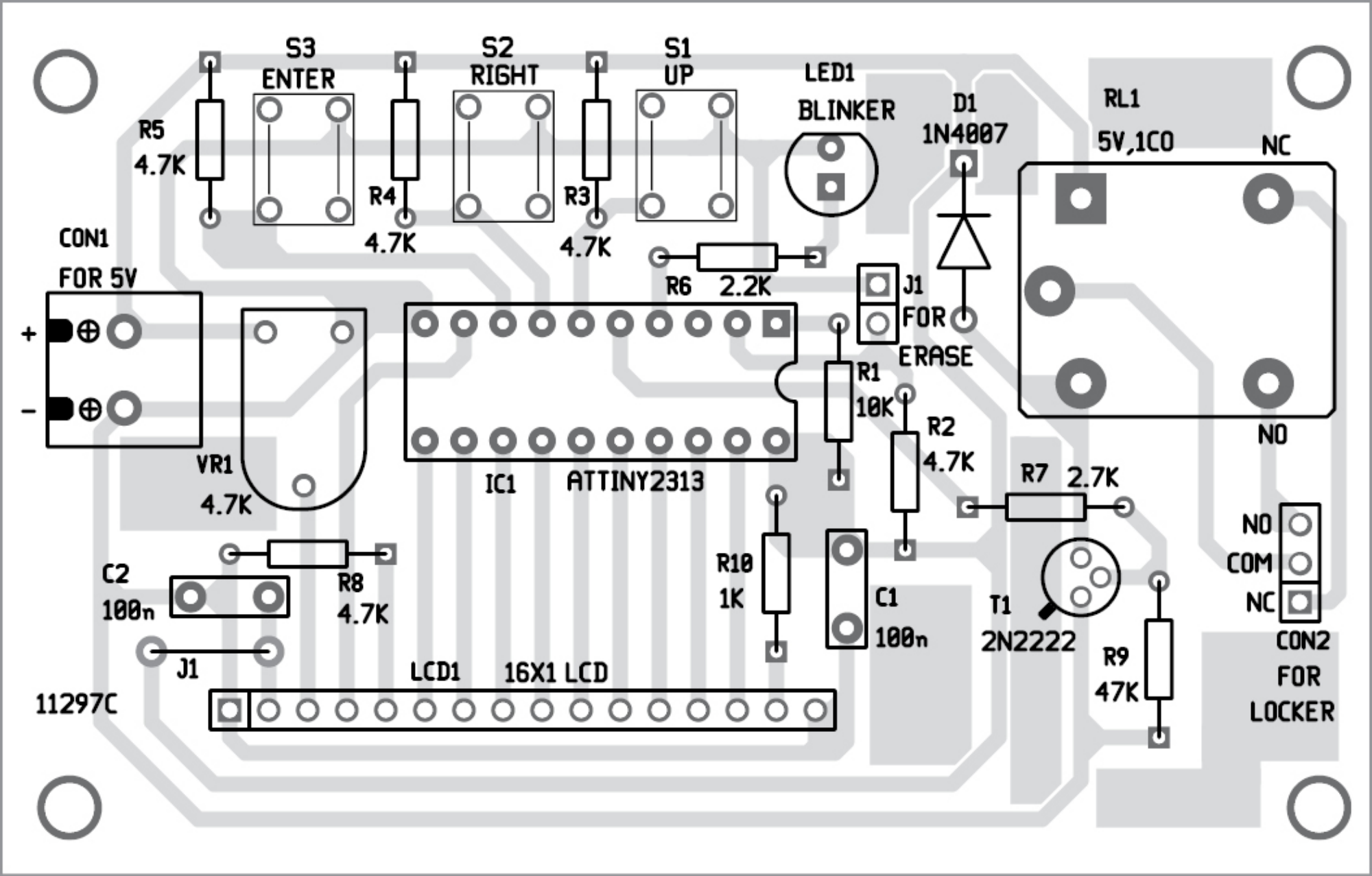
S3
ENTER
S2
RIGHT
S1
UP
LED1
BLINKER
D1
1N4007
RL1
5V,1CO
NC
NO
R5
4.7K
R4
4.7K
R3
4.7K
CON1
FOR 5V
+
-
R6
2.2K
J1
FOR
ERASE
R1
10K
R2
4.7K
VR1
4.7K
IC1
ATTINY2313
R7
2.7K
NO
COM
NC
CON2
FOR
LOCKER
C2
100n
R8
4.7K
R10
1K
C1
100n
T1
2N2222
R9
47K
J1
11297C
LCD1
16X1 LCD