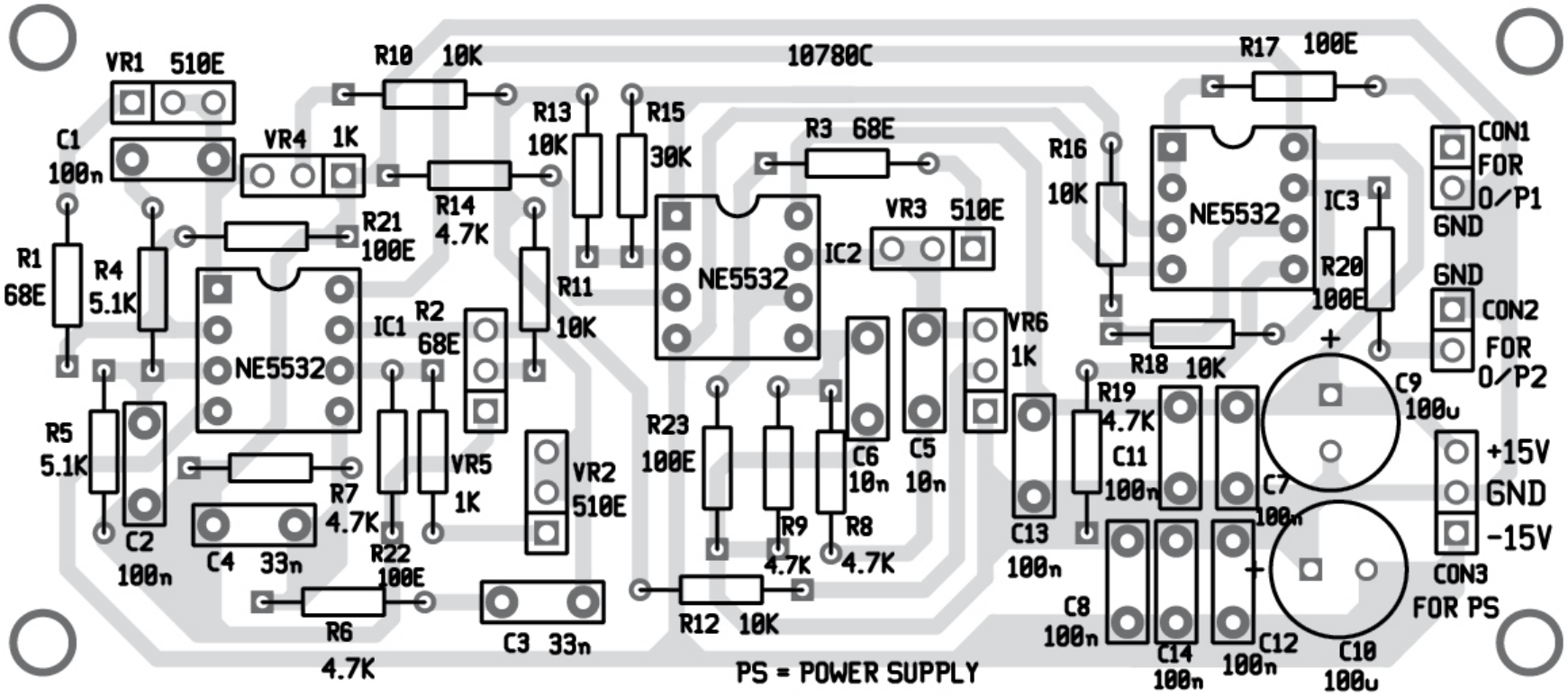
10780C
VR1 510E
C1 100n
R1 68E
R4 5.1K
R5 5.1K
C2 100n
R10 10K
VR4 1K
R14 4.7K
R21 100E
NE5532
IC1
R2 68E
R7 4.7K
C4 33n
R22 100E
R6 4.7K
VR5 1K
VR2 510E
C3 33n
R13 10K
R15 30K
R11 10K
R3 68E
NE5532
IC2
VR3 510E
R23 100E
R9 4.7K
R12 10K
C6 10n
R8 4.7K
C5 10n
VR6 1K
C13 100n
R17 100E
R16 10K
NE5532
IC3
R20 100E
R18 10K
R19 4.7K
C11 100n
C7 100n
C8 100n
C14 100n
C12 100n
C9 100u
C10 100u
CON1 FOR 0/P1
GND
GND
CON2 FOR 0/P2
+15V
GND
-15V
CON3 FOR PS
PS = POWER SUPPLY