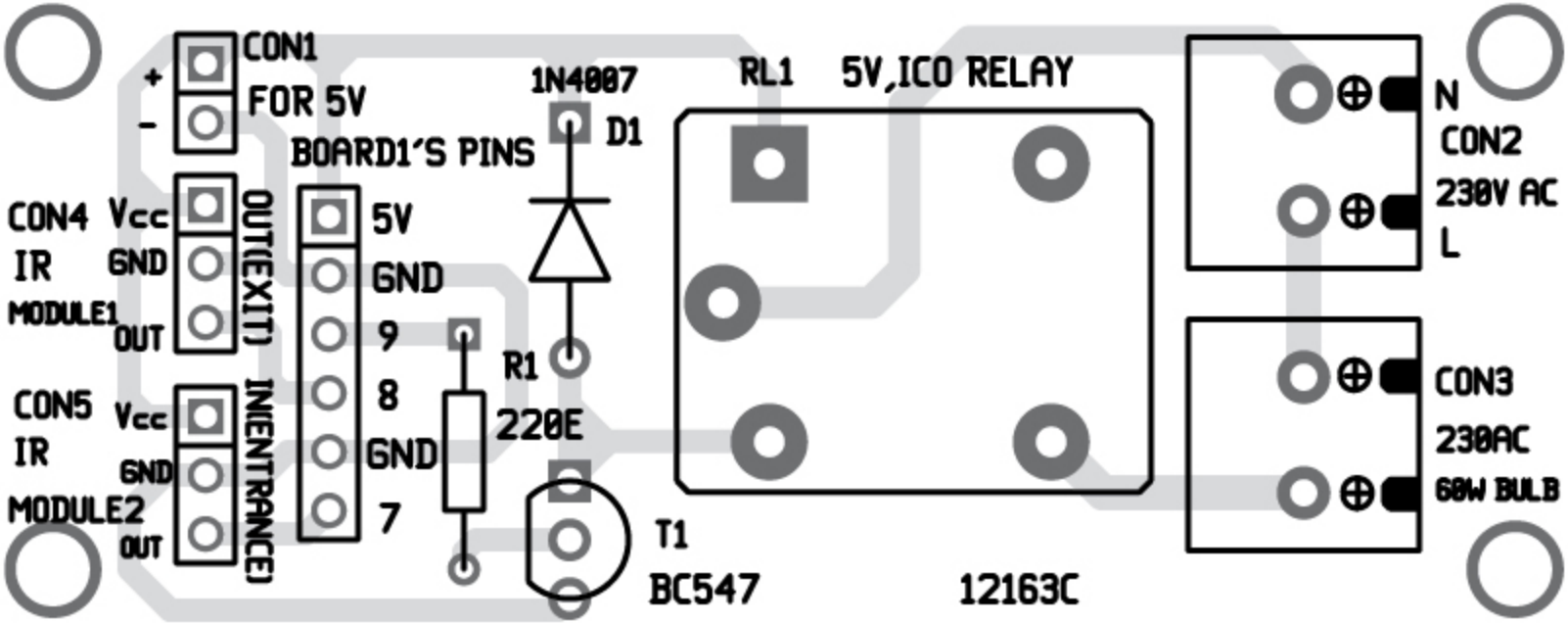
CON1
+
-
FOR 5V
BOARD1'S PINS
1N4007
D1
RL1
5V,ICO RELAY
N
CON2
230V AC
L
CON4
Vcc
IR
GND
MODULE1
OUT
OUT(EXIT)
5V
GND
9
8
GND
7
IN(ENTRANCE)
CON5
Vcc
IR
GND
MODULE2
OUT
R1
220E
T1
BC547
12163C
CON3
230AC
60W BULB