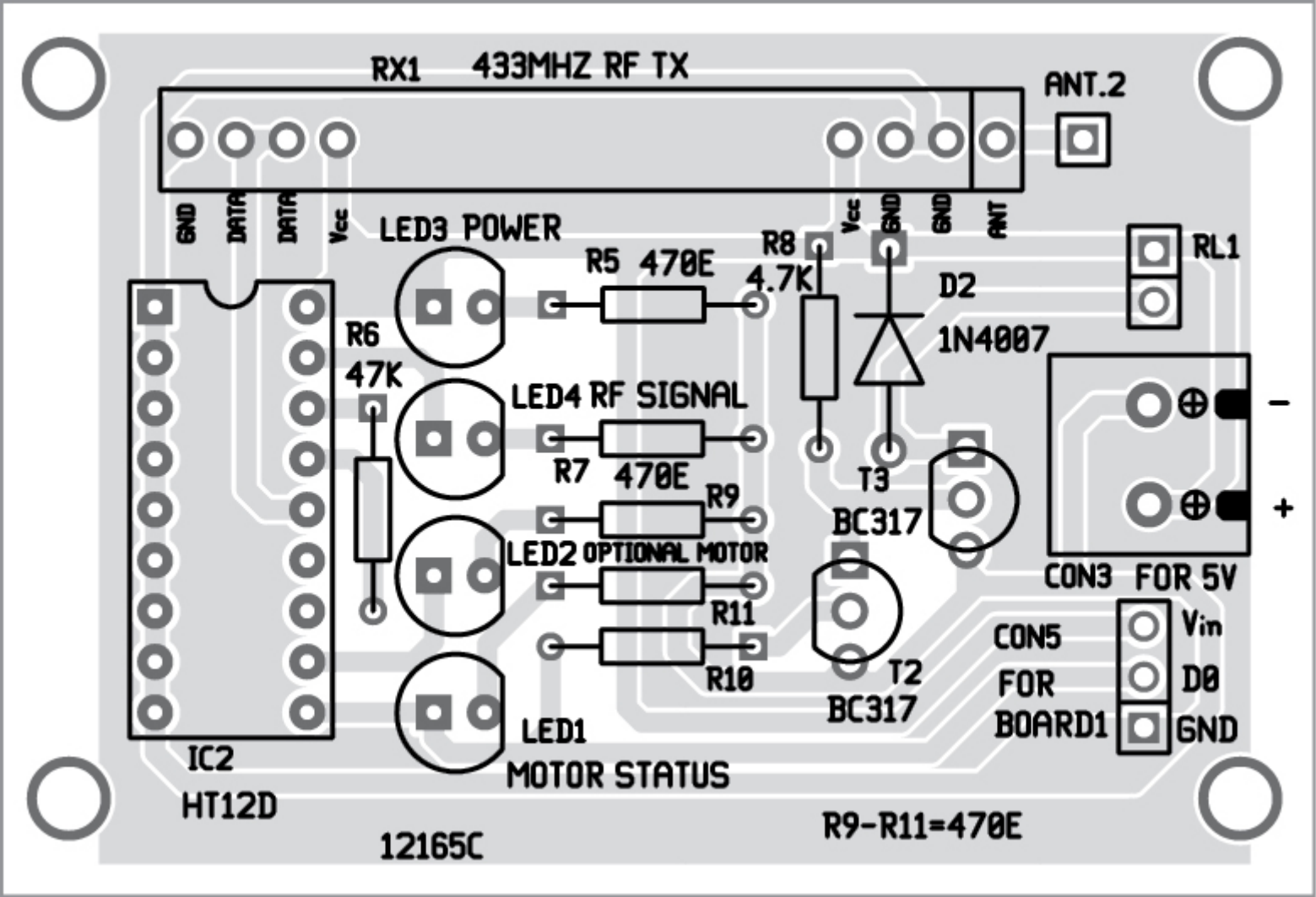
RX1 433MHZ RF TX
ANT.2
GND
DATA
DATA
Vcc
Vcc
GND
GND
ANT
LED3 POWER
R5 470E
R8
4.7K
D2
1N4007
RL1
R6
47K
LED4 RF SIGNAL
R7 470E
R9
T3
BC317
LED2 OPTIONAL MOTOR
R11
R10
T2
BC317
CON3 FOR 5V
CON5
FOR
BOARD1
Vin
D0
GND
LED1
MOTOR STATUS
IC2
HT12D
12165C
R9-R11=470E