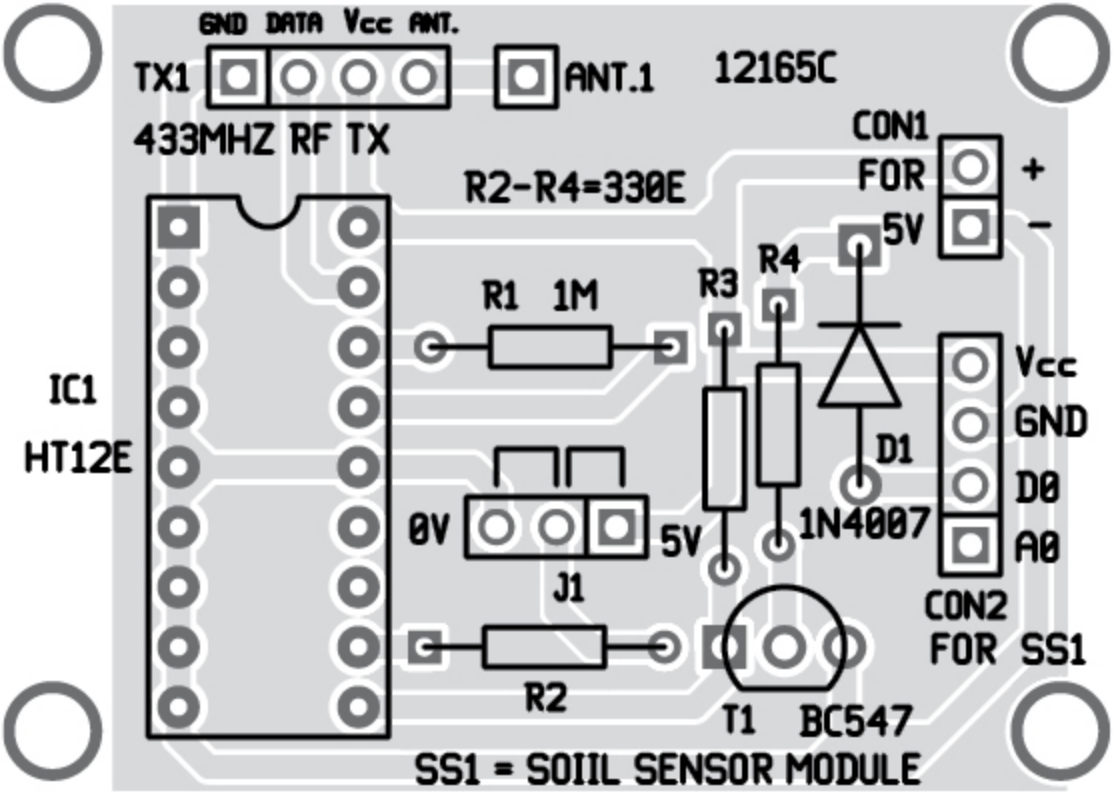
GND DATA Vcc ANT.
TX1
ANT.1
12165C
433MHZ RF TX
CON1
FOR
+
5V
-
R2-R4=330E
R4
R3
R1 1M
IC1
HT12E
Vcc
GND
D0
A0
D1
1N4007
0V
5V
J1
CON2
FOR SS1
R2
T1 BC547
SS1 = SOIIL SENSOR MODULE