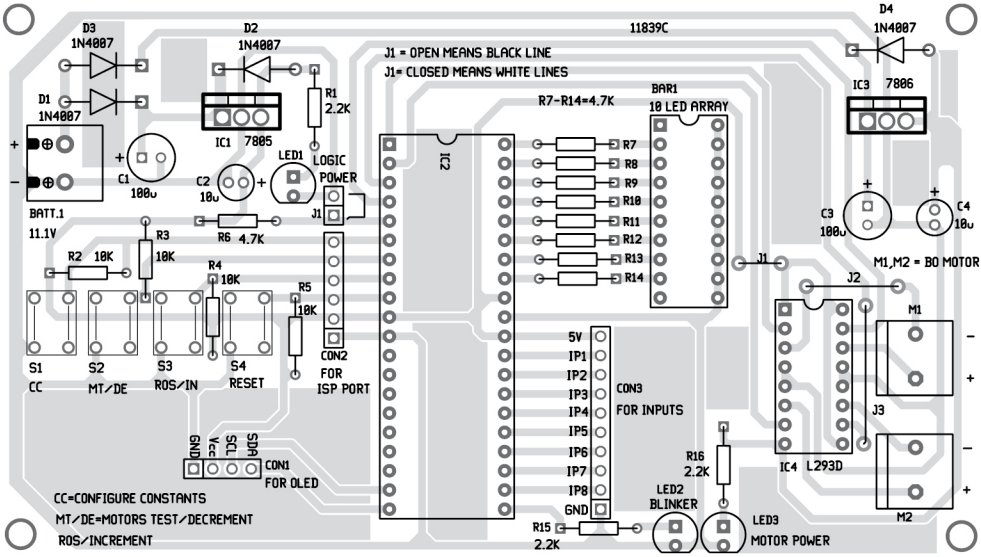
11839C
D3
1N4007
D2
1N4007
D1
1N4007
D4
1N4007
J1 = OPEN MEANS BLACK LINE
J1= CLOSED MEANS WHITE LINES
R1
2.2K
IC1 7805
IC3 7806
R7-R14=4.7K
BAR1
10 LED ARRAY
IC2
LED1
LOGIC
POWER
C1
100u
C2
10u
J1
R6 4.7K
BATT.1
11.1V
R3
10K
R2 10K
R4
10K
R5
10K
S1
CC
S2
MT/DE
S3
ROS/IN
S4
RESET
CON2
FOR
ISP PORT
R7
R8
R9
R10
R11
R12
R13
R14
5V
IP1
IP2
IP3
IP4
IP5
IP6
IP7
IP8
GND
CON3
FOR INPUTS
R15
2.2K
R16
2.2K
LED2
BLINKER
LED3
MOTOR POWER
GND
VCC
SCL
SDA
CON1
FOR OLED
C3
100u
C4
10u
M1,M2 = BO MOTOR
J2
J3
M1
M2
IC4 L293D
CC=CONFIGURE CONSTANTS
MT/DE=MOTORS TEST/DECREMENT
ROS/INCREMENT