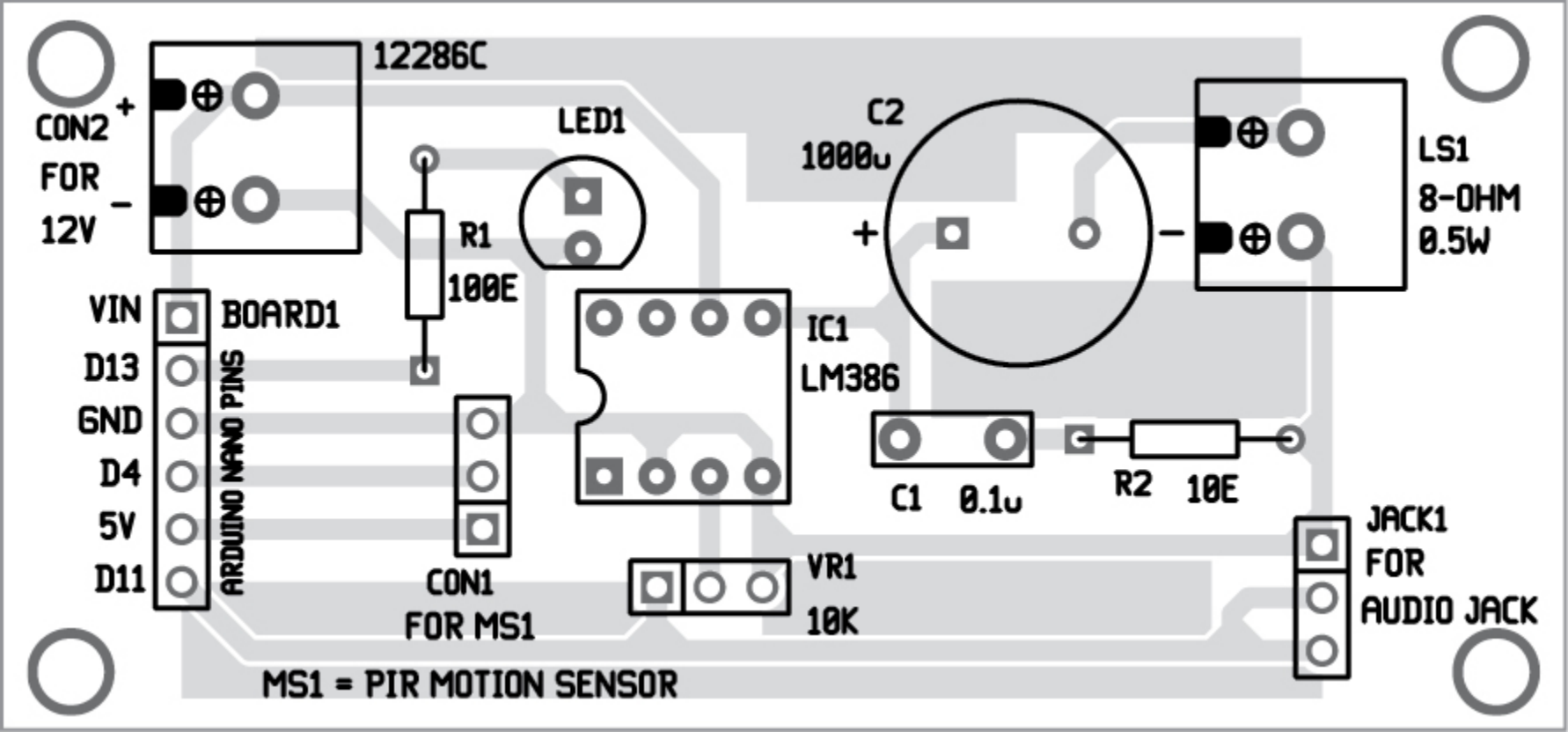
12286C
CON2
FOR
12V
+
-
LED1
R1
100E
C2
1000u
+
-
LS1
8-OHM
0.5W
VIN
BOARD1
D13
GND
D4
5V
D11
ARDUINO NANO PINS
IC1
LM386
C1
0.1u
R2
10E
CON1
FOR MS1
VR1
10K
JACK1
FOR
AUDIO JACK
MS1 = PIR MOTION SENSOR