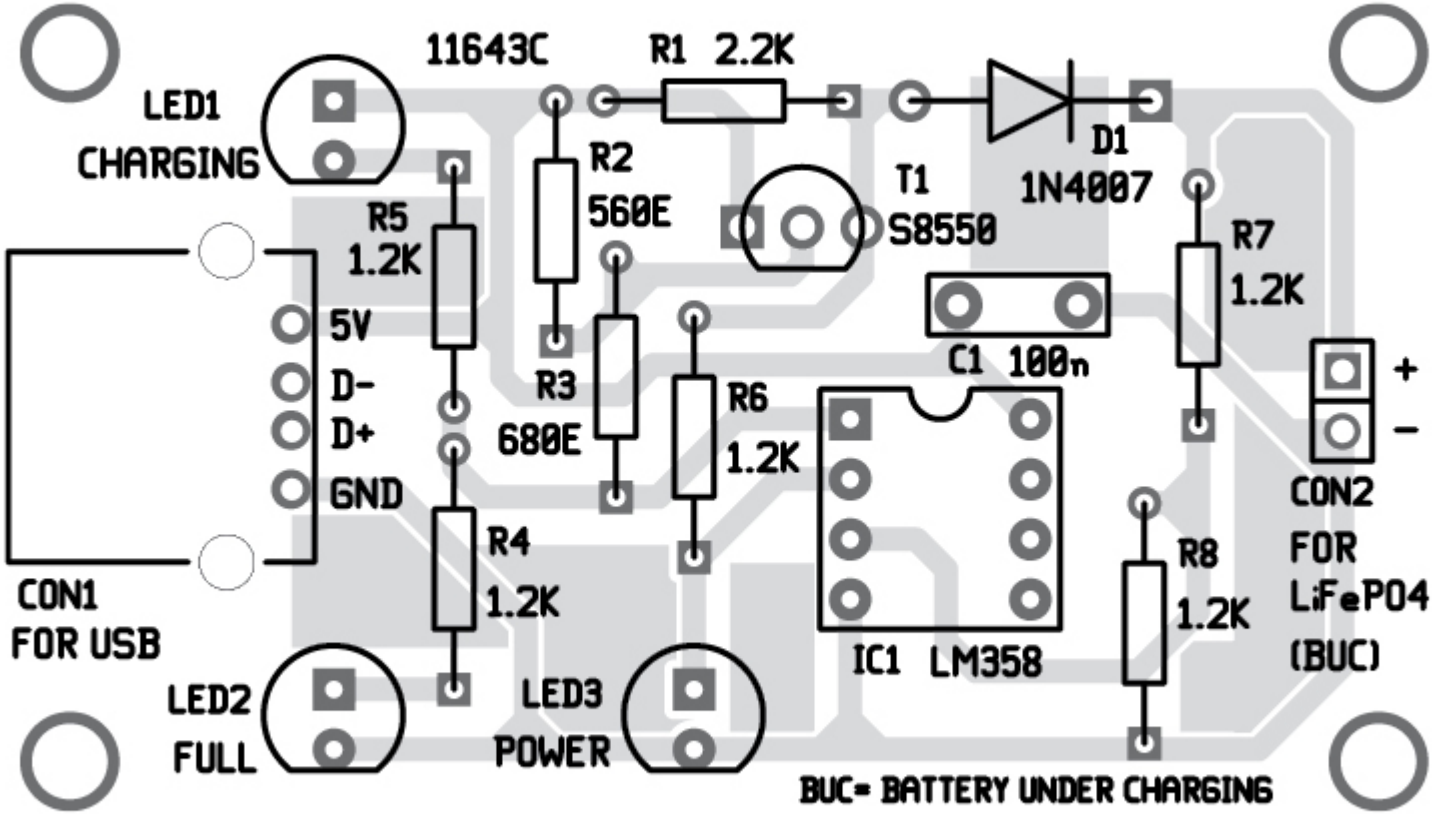
11643C
R1 2.2K
LED1
CHARGING
R2
560E
T1
S8550
D1
1N4007
R5
1.2K
R7
1.2K
5V
D-
D+
GND
R3
680E
R6
1.2K
C1 100n
+
-
CON2
FOR
LiFePO4
(BUC)
R4
1.2K
R8
1.2K
CON1
FOR USB
IC1 LM358
LED2
FULL
LED3
POWER
BUC= BATTERY UNDER CHARGING