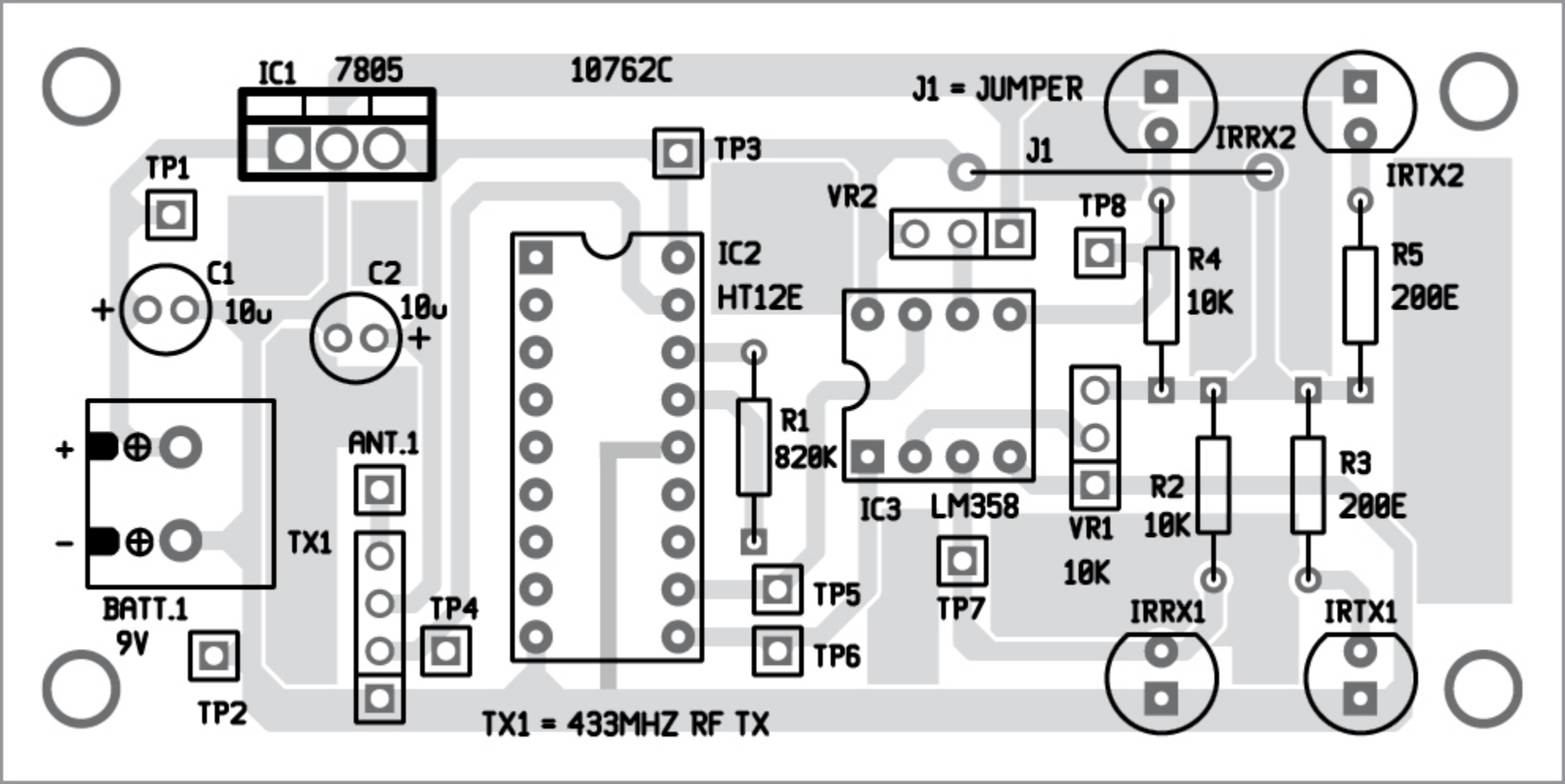
IC1 7805
10762C
J1 = JUMPER
IRRX2
IRTX2
J1
TP1
TP3
VR2
TP8
IC2
HT12E
R4
10K
R5
200E
C1
10u
C2
10u
R1
820K
IC3 LM358
VR1
10K
R2
10K
R3
200E
ANT.1
TX1
BATT.1
9V
TP4
TP5
TP6
TP7
IRRX1
IRTX1
TP2
TX1 = 433MHZ RF TX