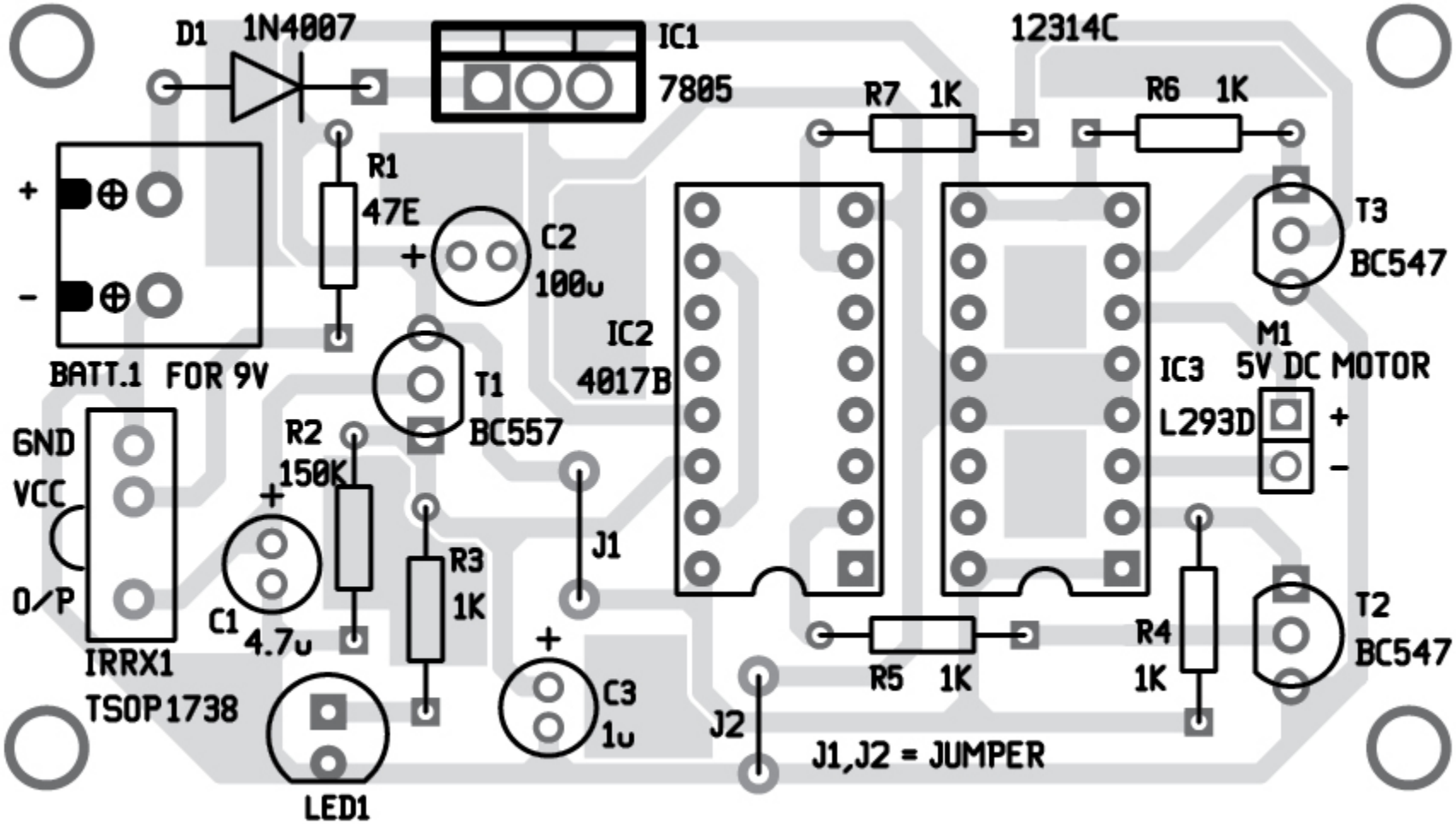
D1
1N4007
IC1
7805
12314C
R7 1K
R6 1K
R1
47E
C2
100u
T3
BC547
BATT.1 FOR 9V
IC2
4017B
T1
BC557
IC3
L293D
M1
5V DC MOTOR
GND
VCC
O/P
IRRX1
TSOP1738
R2
150K
C1
4.7u
R3
1K
J1
C3
1u
LED1
J2
R5 1K
R4
1K
T2
BC547
J1,J2 = JUMPER