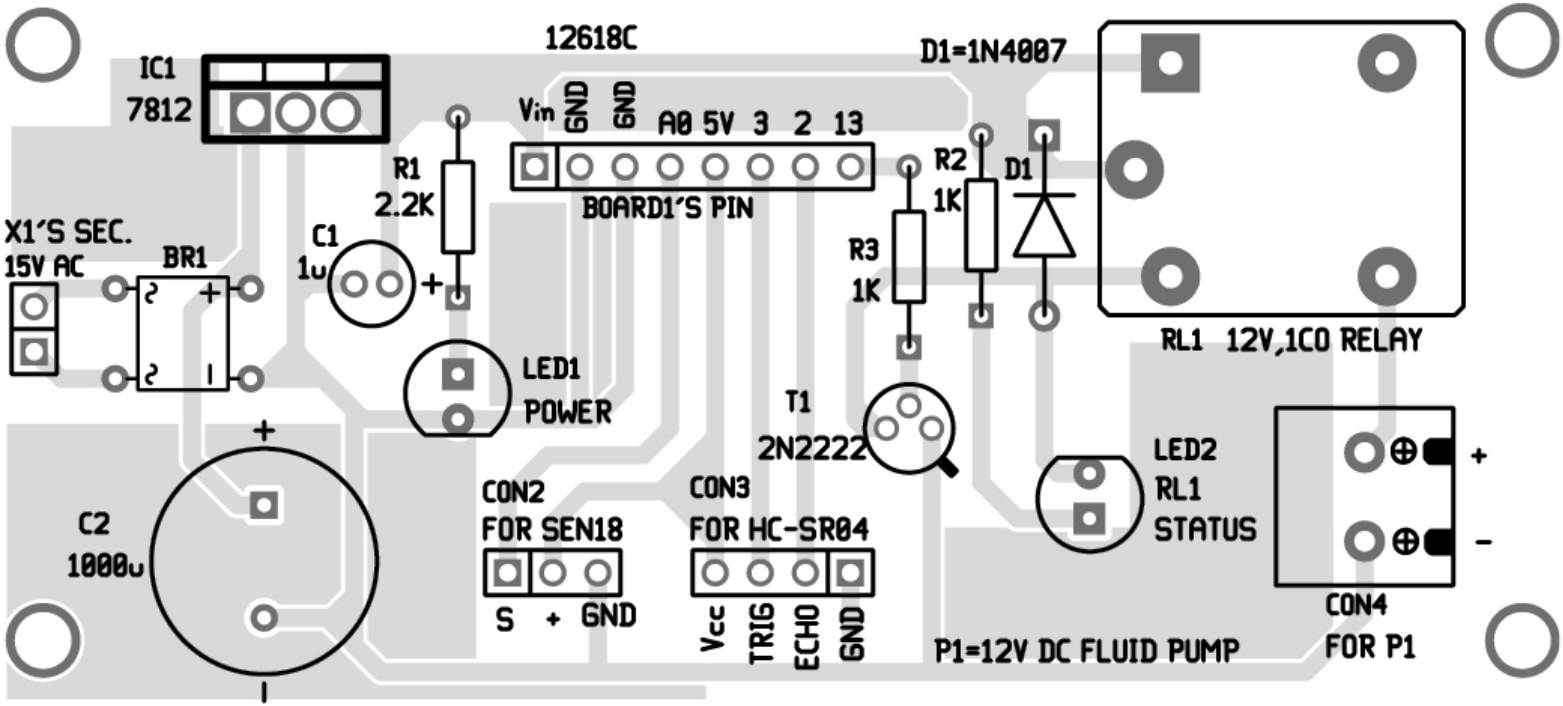
IC1
7812
12618C
Vin GND GND A0 5V 3 2 13
BOARD1'S PIN
D1=1N4007
R1
2.2K
R2
1K
D1
R3
1K
X1'S SEC.
15V AC
BR1
C1
1u
LED1
POWER
T1
2N2222
RL1 12V,1CO RELAY
LED2
RL1
STATUS
C2
1000u
CON2
FOR SEN18
S + GND
CON3
FOR HC-SR04
Vcc TRIG ECHO GND
P1=12V DC FLUID PUMP
CON4
FOR P1
+
-