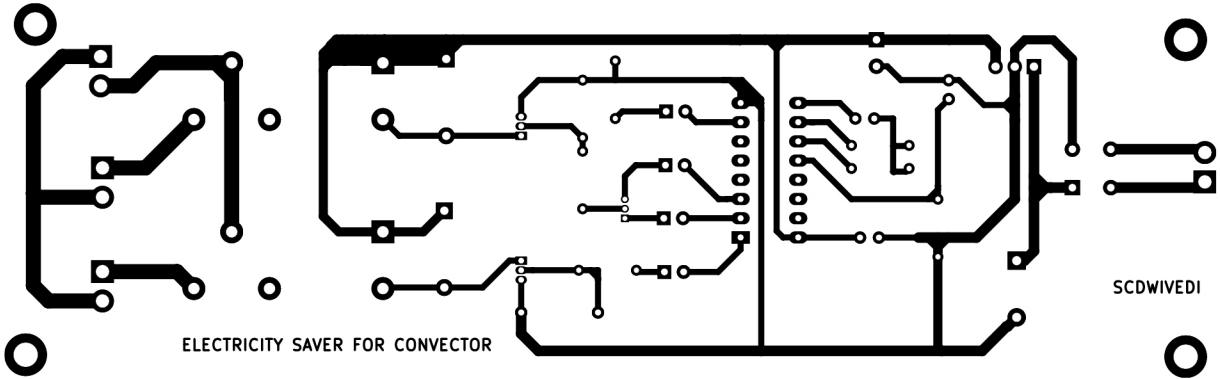
ELECTRICITY SAVER FOR CONVECTOR
SCDWIVEDI