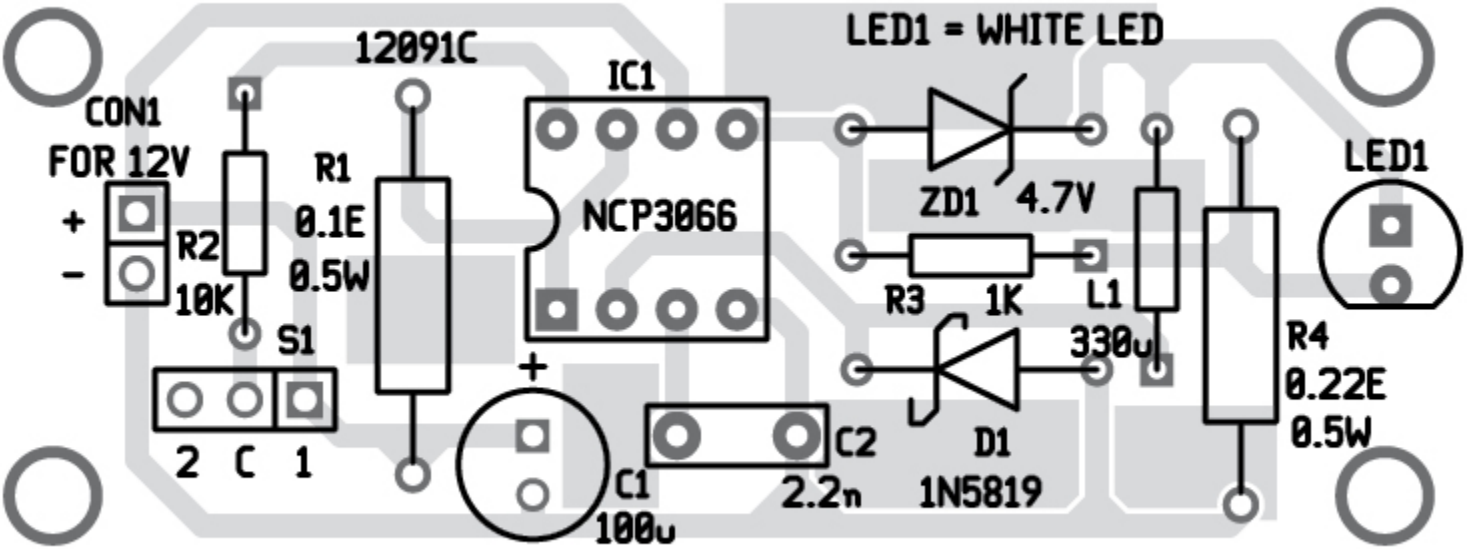
LED1 = WHITE LED
12091C
IC1
CON1
FOR 12V
+
-
R2
10K
R1
0.1E
0.5W
NCP3066
ZD1
4.7V
LED1
R3
1K
L1
330u
S1
2 C 1
+
C1
100u
C2
2.2n
D1
1N5819
R4
0.22E
0.5W