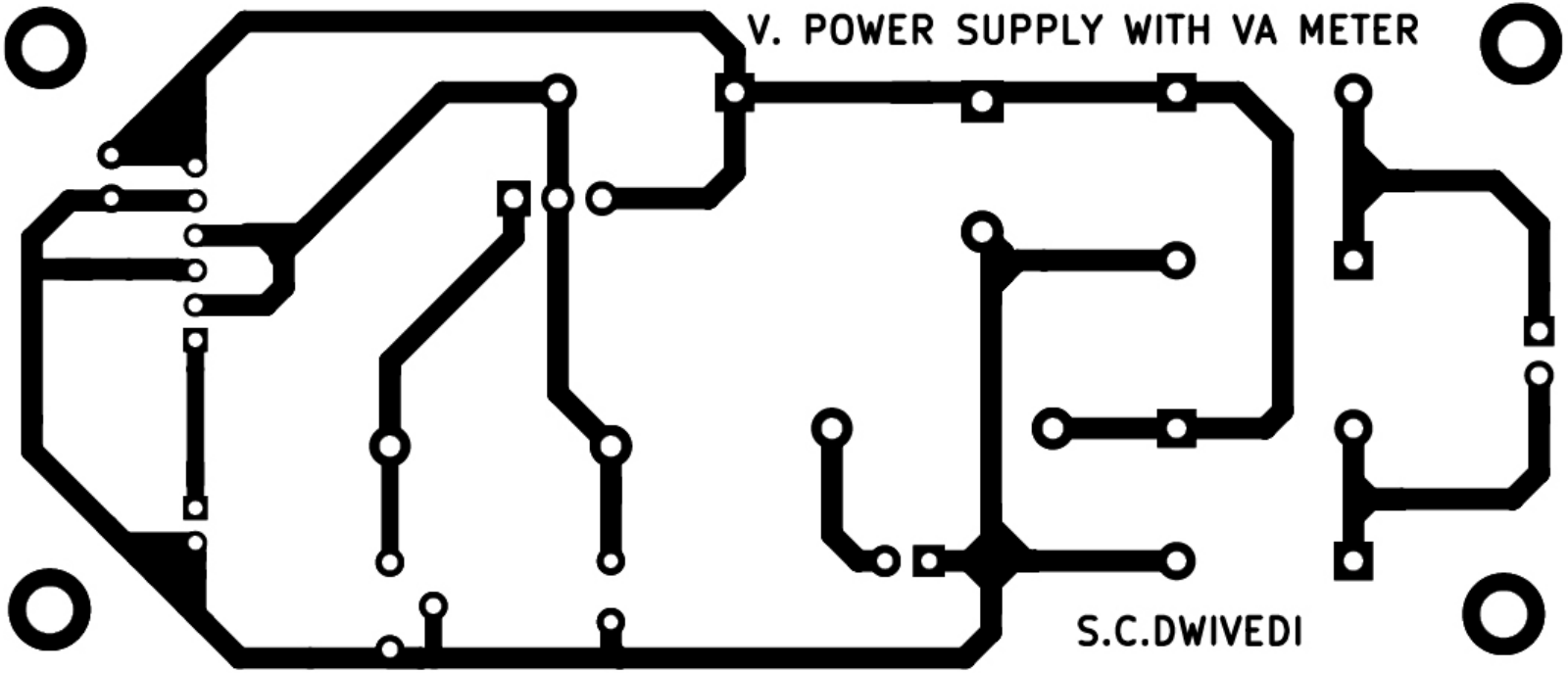
V. POWER SUPPLY WITH VA METER
S.C.DWIVEDI