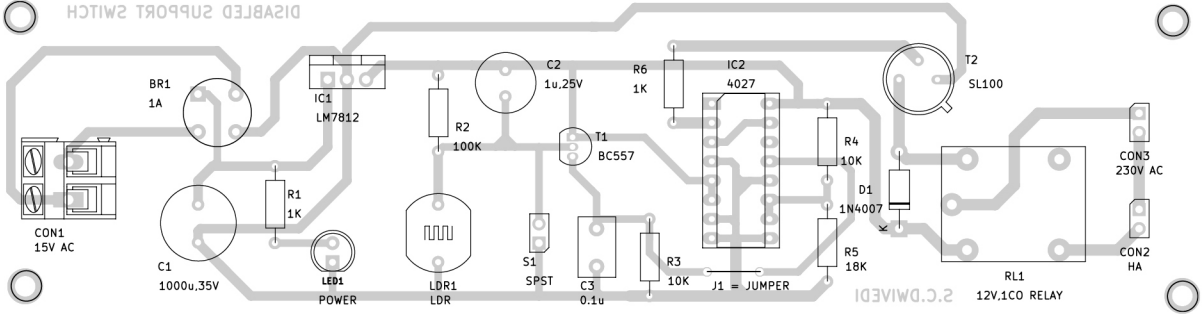
DISABLED SUPPORT SWITCH
BR1
1A
IC1
LM7812
C2
1u,25V
R6
1K
IC2
4027
T2
SL100
R2
100K
T1
BC557
R4
10K
D1
1N4007
CON3
230V AC
CON1
15V AC
R1
1K
C1
1000u,35V
LED1
POWER
LDR1
LDR
S1
SPST
C3
0.1u
R3
10K
J1 = JUMPER
R5
18K
RL1
12V,1CO RELAY
CON2
HA
S.C.DWIVEDI