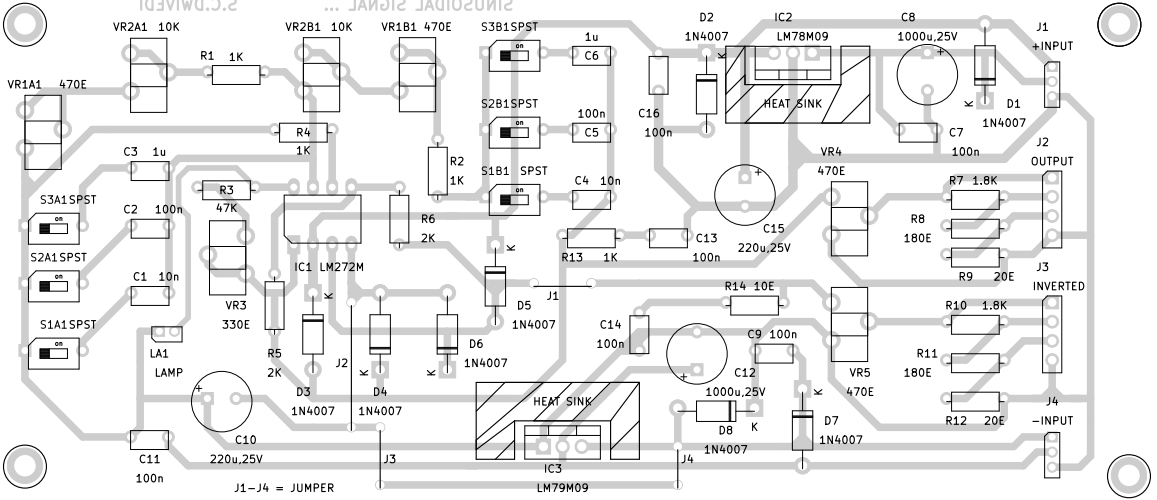
SINUSOIDAL SIGNAL ... S.C.DWIVEDI
VR2A1 10K
R1 1K
VR2B1 10K
VR1B1 470E
S3B1SPST
1u
C6
D2
1N4007
IC2
LM78M09
C8
1000u,25V
J1
+INPUT
VR1A1 470E
S2B1SPST
100n
C5
C16
100n
HEAT SINK
D1
1N4007
C7
100n
R4
1K
C3 1u
R2
1K
S1B1 SPST
C4 10n
VR4
470E
J2
OUTPUT
R7 1.8K
S3A1SPST
R3
47K
C2 100n
R6
2K
C13
100n
C15
220u,25V
R8
180E
S2A1SPST
IC1 LM272M
R13 1K
R9 20E
J3
INVERTED
C1 10n
VR3
330E
D5
1N4007
J1
R14 10E
R10 1.8K
S1A1SPST
C14
100n
C9 100n
R11
180E
LA1
LAMP
R5
2K
J2
D6
1N4007
C12
1000u,25V
VR5
470E
J4
−INPUT
D3
1N4007
D4
1N4007
HEAT SINK
D8
1N4007
D7
1N4007
C10
220u,25V
C11
100n
J3
IC3
LM79M09
J4
J1−J4 = JUMPER